Board of Adjustment Staff Report

Meeting Date: May 6, 2021 **Agenda Item: 8A**

AMENDMENT OF CONDITIONS CASE NUMBER: WAC21-0002 (Extension of Time for WSUP19-0003, Vya Monopole)

BRIEF SUMMARY OF REQUEST: Extend the approval of Special Use Permit Case Number WSUP19-0003 for one additional year, until June 6, 2022

STAFF PLANNER:

Planners Name: Roger Pelham, Senior Planner
Phone Number: 775.328.3622
Email: rpelham@washoecounty.us

CASE DESCRIPTION

For hearing, discussion and possible action to approve an amendment of conditions to extend the approval of Special Use Permit Case Number WSUP19-0003 for one additional year, until June 6, 2022. The original approval was for a new wireless cellular facility consisting of a 150-foot-high monopole structure, equipment shelter, outdoor generator and LP tank.

Applicant:	Commnet of Nevada
Property Owner:	United States of America – Bureau of Land Management
Location:	On the south side of Dugway Road, approximately 1.5 miles southwest of its intersection with County Road 34, in the area of Vya, Northern Washoe County
APN:	061-010-49
Parcel Size:	± 774 acres
Master Plan:	Rural
Regulatory Zone:	General Rural
Area Plan:	High Desert
Citizen Advisory Board:	Gerlach/Empire
Development Code:	Authorized in Article 324, Communication Facilities and Article 810, Special Use Permits
Commission District:	5 – Commissioner Herman

Vicinity Map

STAFF RECOMMENDATION

APPROVE **APPROVE WITH CONDITIONS** **DENY**

POSSIBLE MOTION

I move that, after giving reasoned consideration to the information contained in the staff report and information received during the public hearing, the Washoe County Board of Adjustment approve Amendment of Conditions Case Number WAC21-0002 for Commnet of Nevada with the conditions included as Exhibit A to this matter, having made all five findings in accordance with Washoe County Code Section 110.810.30 and in accordance with the High Desert Area Plan:

(Motion with Findings on Page 7)

Staff Report Contents

Amendment of Conditions 2
Site Plan 4
Background and Evaluation of Amendment Request 5
Gerlach/Empire Citizen Advisory Board (GE CAB) 5
Reviewing Agencies 5
Recommendation 7
Motion 7
Appeal Process 7

Exhibits Contents

Conditions of Approval ..... Exhibit A
WSUP19-0003 Staff Report from 2019 ..... Exhibit B
Amendment of Conditions Application ..... Exhibit C
Public Notice ..... Exhibit D
Agency Comments ..... Exhibit E

Amendment of Conditions

An amendment of conditions application is necessary in order to change condition(s) of an approved discretionary permit, such as a special use permit, a variance, an abandonment of an easement or a tentative subdivision map. Some examples of why an amendment of conditions application is submitted are listed below:

- Change in operating hours
- Physical expansion
- Extend the expiration date of the discretionary permit
- Extend the time to complete phases of the approved project

The amendment of conditions request is required to be heard by the same board that approved the original application and only the specific amendment may be discussed and considered for approval. The amendment of conditions application is processed in the same manner as the original discretionary permit application, including a public hearing, noticing, possible involvement of a citizen advisory board, agency review and analysis, and satisfying the required findings. If the Board of Adjustment grants an approval of the amendment of conditions request, an amended Action Order is created along with amended conditions of approval.

The subject property has a regulatory zone of General Rural (GR). The proposed use of a 150 foot tall monopole, which is classified as a Wireless Communication Facility per Article 324 of the Washoe County Development Code, is permitted in the GR zone with a special use permit (SUP) per WCC Section 110.324.50(e)(2). Special Use Permit Case Number WSUP19-0003 was approved in June of 2019, the applicant is now seeking approval of an extension of time of this SUP from the Board of Adjustment. The conditions of approval for Amendment of Conditions Case Number WAC21-0002 is attached to this staff report and will be included with the amended action order, if approval is granted by Washoe County Board of Adjustment.

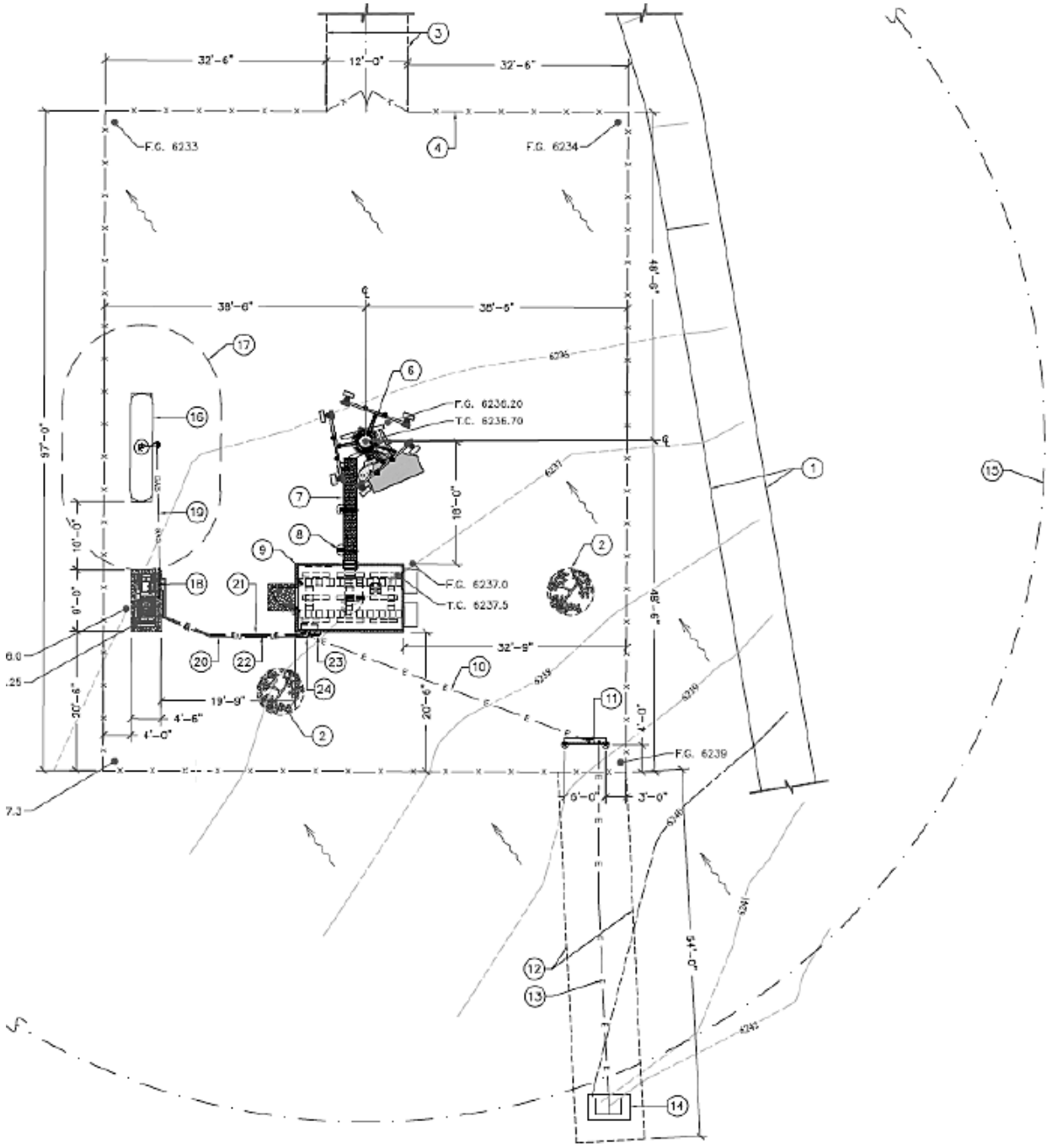
32'-6"
12'-0"
32'-6"
F.G. 6233
F.G. 6234
38'-6"
38'-6"
F.G. 6236.20
T.C. 6236.70
F.G. 6237.0
T.C. 6237.5
32'-9"
19'-9"
4'-6"
4'-0"
F.G. 6239
6'-0"
3'-0"

Site Plan

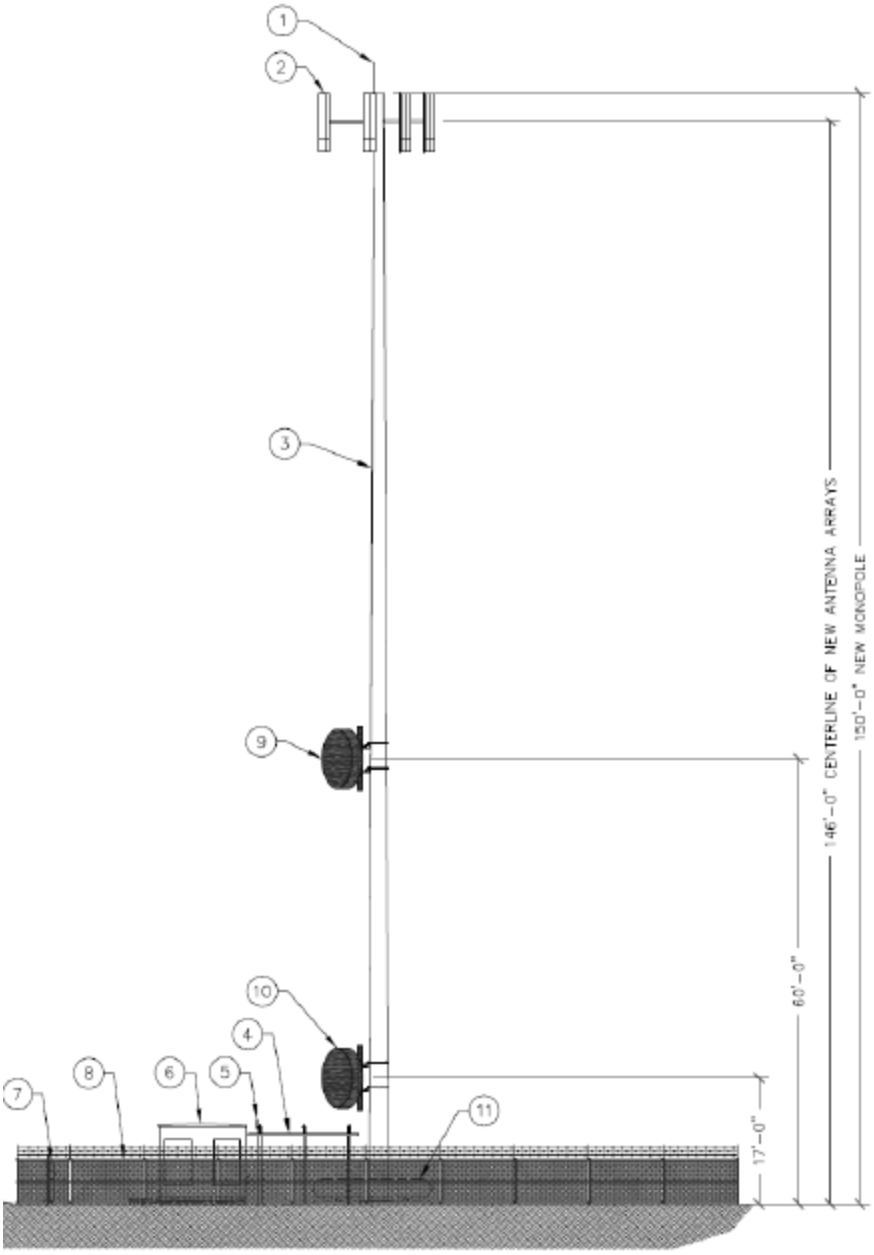

Proposed Elevation

Background and Evaluation of Amendment Request

Special Use Permit Case Number WSUP19-0003 was approved in June of 2019. The application materials indicate that delays occurred in obtaining final approval from the US Bureau of Land Management (BLM) caused by forest fires, COVID-19, and lack of staff. For these reasons, the applicant is seeking an extension of one year to obtain the necessary permits and approvals from Washoe County and the BLM for construction of the facility. The original staff report is included at Exhibit C to this report. It is the opinion of Planning Staff that there have been no significant changes to the situation, that the original evaluation remains valid and that approval of the extension of time is reasonable.

High Desert Area Plan

The subject parcel is located within the High Desert Area Plan. The following is the pertinent policy from the Area Plan:

Relevant Area Plan Policies Reviewed

Policy	Brief Policy Description	Complies	Condition of Approval
HD 2.13	The approval of all special use permits and administrative permits must include a finding that the community character as described in the Character Statement can be adequately conserved through mitigation of any identified potential negative impacts.	Yes	NA

Gerlach/Empire Citizen Advisory Board (GE CAB)

The CAB did not have a meeting scheduled during the review time for this request. The application was sent to each CAB member and written comments were requested. No comments were received.

Reviewing Agencies

The following agencies/individuals received a copy of the project application for review and evaluation.

Agency	Sent to Review	Responded	Provided Conditions	Contact
BLM – Nevada State Office	☒	☐	☐	
Nevada Dept of Env Protection	☒	☐	☐	
Nevada Dept of Water Resources	☒	☐	☐	
Nevada Div. of Wildlife	☒	☐	☐	
Washoe County Building & Safety	☒	☐	☐	
Washoe County Parks & Open Spaces	☒	☒	☐	
Washoe County Water Rights	☒	☐	☐	
Washoe County Engineering	☒	☐	☐	
Washoe County Sherriff	☒	☐	☐	
WCHD – Air Quality	☒	☒	☐	
WCHD – Environment Health	☒	☐	☐	
WCHD- EMS	☒	☒	☐	
Truckee Meadows Fire Protection District	☒	☒	☐	

RTC Washoe	☒	☐	☐	
Washoe Storey Conservation District	☒	☐	☐	
Nevada Historic Preservation	☒	☐	☐	

No new conditions were received from any of the above reviewing agencies. All conditions required by the contacted agencies from the original approved special use permit can be found in Exhibit A, Conditions of Approval.

Recommendation

After a thorough review and analysis, Amendment of Conditions Case Number WAC21-0002 is being recommended for approval with conditions. Staff offers the following motion for the Board's consideration.

Motion

I move that, after giving reasoned consideration to the information contained in the staff report and information received during the public hearing, the Washoe County Board of Adjustment approve Amendment of Conditions Case Number WAC21-0002 for Commnet of Nevada with the conditions included as Exhibit A to this matter, having made all five findings in accordance with Washoe County Code Section 110.810.30 and in accordance with the High Desert Area Plan:

1. Consistency. That the proposed use is consistent with the action programs, policies, standards and maps of the Master Plan and the High Desert Area Plan;
2. Improvements. That adequate utilities, roadway improvements, sanitation, water supply, drainage, and other necessary facilities have been provided, the proposed

   improvements are properly related to existing and proposed roadways, and an adequate public facilities determination has been made in accordance with Division Seven;
3. Site Suitability. That the site is physically suitable for a telecommunications facility (monopole), and for the intensity of such a development;
4. Issuance Not Detrimental. That issuance of the permit will not be significantly detrimental to the public health, safety or welfare; injurious to the property or improvements of adjacent properties; or detrimental to the character of the surrounding area;
5. Effect on a Military Installation. Issuance of the permit will not have a detrimental effect on the location, purpose or mission of the military installation.
6. High Desert Area Plan Policy 2.3. The community character as described in the Character Statement can be adequately conserved through mitigation of any identified potential negative impacts

Appeal Process

Board of Adjustment action will be effective 10 calendar days after the written decision is filed with the Secretary to the Planning Commission and mailed to the applicant(s), unless the action is appealed to the Washoe County Board of County Commissioners, in which case the outcome of the appeal shall be determined by the Washoe County Board of County Commissioners. Any appeal must be filed in writing with the Planning and Building Division within 10 calendar days from the date the written decision is filed with the Secretary to the Planning Commission and mailed to the applicant(s).

Applicant: Commnet of Nevada

Attn: Cindy Phillips
1562 North Park St
Castle Rock, CO 80109

Property Owner: US BLM,
Attn: Rylee Pedotti
708 W. 12th St.
Alturas, CA 96101

Representatives: CIS Communications
Attn: Julie Krekeler
749 Old Ballas Rd
Creve Cour, MO 63141

Amended Conditions of Approval

Amendment of Conditions Case Number WAC21-0002 (Extension of Time for WSUP19-0003, Vya Monopole)

The project approved under Amendment of Conditions Case Number WAC21-0002 (Extension of Time for WSUP19-0003, Vya Monopole) shall be carried out in accordance with the Conditions of Approval granted by the Board of Adjustment on May 06, 2021. These Amended Conditions of Approval shall replace the Conditions of Approval for Special Use Permit Case Number WSUP19-0003 in their entirely. Conditions of Approval are requirements placed on a permit or development by each reviewing agency. These Amended Conditions of Approval may require submittal of documents, applications, fees, inspections, amendments to plans, and more. These conditions do not relieve the applicant of the obligation to obtain any other approvals and licenses from relevant authorities required under any other act.

Unless otherwise specified, all conditions related to the approval of this Special Use Permit shall be met or financial assurance must be provided to satisfy the conditions of approval prior to issuance of a grading or building permit. The agency responsible for determining compliance with a specific condition shall determine whether the condition must be fully completed or whether the applicant shall be offered the option of providing financial assurance. All agreements, easements, or other documentation required by these conditions shall have a copy filed with the County Engineer and the Planning and Building Division.

Compliance with the amended conditions of approval related to this Special Use Permit is the responsibility of the applicant, his/her successor in interest, and all owners, assignees, and occupants of the property and their successors in interest. Failure to comply with any of the conditions imposed in the approval of the Special Use Permit may result in the institution of revocation procedures.

Washoe County reserves the right to review and revise the conditions of approval related to this Special Use Permit should it be determined that a subsequent license or permit issued by Washoe County violates the intent of this approval.

For the purpose of conditions imposed by Washoe County, “may” is permissive and “shall” or “must” is mandatory.

Conditions of Approval are usually complied with at different stages of the proposed project. Those stages are typically:

- Prior to permit issuance (i.e., grading permits, building permits, etc.).
- Prior to obtaining a final inspection and/or a certificate of occupancy.
- Prior to the issuance of a business license or other permits/licenses.
- Some “Conditions of Approval” are referred to as “Operational Conditions.” These conditions must be continually complied with for the life of the project or business.

FOLLOWING ARE CONDITIONS OF APPROVAL REQUIRED BY THE REVIEWING AGENCIES. EACH CONDITION MUST BE MET TO THE SATISFACTION OF THE ISSUING AGENCY.

Washoe County Planning and Building Division

1. The following conditions are requirements of Planning and Building, which shall be responsible for determining compliance with these conditions.

   Contact Name – Roger Pelham (775)328-3622, rpelham@washoecounty.us

   a. **The applicant shall attach a copy of the Action Order approving this project to all administrative permit applications (including building permits) applied for as part of this special use permit**.

   b. The applicant shall demonstrate substantial conformance to the plans approved as part of this special use permit. The Planning and Building Division shall determine compliance with this condition.

   c. The applicant shall demonstrate conformance to State of Nevada Executive Order 2018-32, Order Establishing Use of the Nevada Greater Sage-Grouse Conservation Plan and Credit System. The Planning and Building Division shall determine compliance with this condition.

   d. The applicant shall submit complete construction plans and building permits shall be issued **on or before June 6, 2022**. The applicant shall complete construction within the time specified by the building permits. Compliance with this condition shall be determined by the Planning and Building Division.

   e. All existing trees and landscaping removed as part of the construction of this facility shall be replaced at the rate of two trees for each tree removed and two bushes for each bush removed.

   f. The monopole tower shall not exceed 150 feet in maximum height, as approved under this special use permit WSUP19-0003.

   g. A note shall be placed on all construction drawings and grading plans stating:

   NOTE

   Should any prehistoric or historic remains/artifacts be discovered during site development, work shall temporarily be halted at the specific site and the State Historic Preservation Office of the Department of Museums, Library and Arts shall be notified to record and photograph the site. The period of temporary delay shall be limited to a maximum of two (2) working days from the date of notification.

   h. Prior to the issuance of a building permit, the applicant shall provide a certification by a professional that the facility complies with Federal Communications Commission (FCC) regulations for Radio Frequency Emissions (RFE).

   i. Prior to the issuance of a building permit the applicant shall record a statement of assurance that the wireless communications facility shall be removed if the use of the facility is discontinued for a period of twelve (12) consecutive months.

   j. The following **Operational Conditions** shall be required for the life of the unmanned wireless telecommunications monopole.

      i. This special use permit shall remain in effect until or unless it is revoked or is inactive for one year.

ii. Failure to comply with the Conditions of Approval shall render this approval null and void. Compliance with this condition shall be determined by the Planning and Building Division.

iii. The applicant and any successors shall direct any potential purchaser/operator of the site and/or the special use permit to meet with the Planning and Building Division staff to review Conditions of Approval prior to the final sale of the site and/or the special use permit. Any subsequent purchaser/operator of the site and/or the special use permit shall notify the Planning and Building Division of the name, address, telephone number, and contact person of the new purchaser/operator within 30 days of the final sale.

Washoe County Engineering and Capital Projects

2. The following conditions are requirements of the Engineering Division, which shall be responsible for determining compliance with these conditions.

   Contact Name – Leo Vesely, (775) 328-2041, lvesely@washoecounty.us

   a. A complete set of construction improvement drawings, including an on-site grading plan, shall be submitted when applying for a building/grading permit. Grading shall comply with best management practices (BMP's) and shall include detailed plans for grading, site drainage, erosion control (including BMP locations and installation details), slope stabilization, and mosquito abatement. Placement or removal of any excavated materials shall be indicated on the grading plan. Silts shall be controlled on-site and not allowed onto adjacent property.

   b. The applicant shall provide documentation of easements for the lease area, access and utilities. A copy of the easements shall be submitted to the Engineering Division prior to the approval of a building permit.

   c. All existing and proposed easements shall be shown on the site and/or grading plan.

*** End of Conditions ***

Exhibit B

Board of Adjustment Staff Report

Meeting Date: June, 06, 2019 **Agenda Item: 8K**

SPECIAL USE PERMIT CASE NUMBER: WSUP19-0003 (Vya Monopole)

BRIEF SUMMARY OF REQUEST: To approve a special use permit for the construction of a new wireless cellular facility consisting of a 150 foot monopole tower.

STAFF PLANNER: Jacob Parker
775.328.3628
jparker@washoecounty.us

CASE DESCRIPTION

For possible action, hearing, and discussion to approve a special use permit for the installation and operation of a 150-foot tall monopole telecommunication facility with all necessary appurtenances/supporting equipment and facilities and to vary development code requirements for landscaping for a commercial use by waiving them for this project.

Applicant:	Commnet of Nevada LLC
Property Owner:	United States of America
Location:	Immediately north of State Route 8A, ±2 miles west of Fortynine Lake
APN:	061-010-49
Parcel Size:	773.89 acres
Master Plan:	Rural (R)
Regulatory Zone:	General Rural (GR)
Area Plan:	High Desert
Citizen Advisory Board:	Gerlach/Empire
Development Code:	Authorized in Article 324, Communication Facilities and Article 810 Special Use Permits
Commission District:	5 – Commissioner Herman

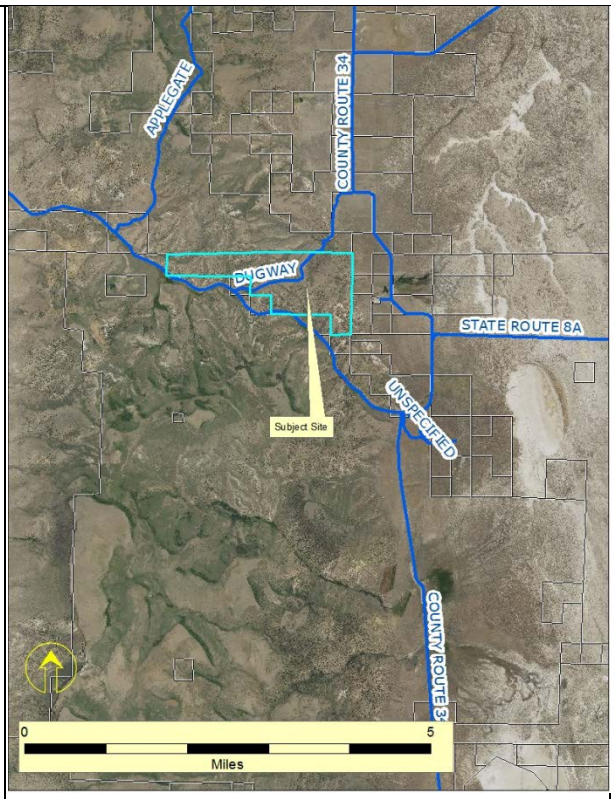

STAFF RECOMMENDATION

APPROVE | APPROVE WITH CONDITIONS | DENY

POSSIBLE MOTION

I move that, after giving reasoned consideration to the information contained in the staff report and information received during the public hearing, the Washoe County Board of Adjustment approve with conditions Special Use Permit Case Number WSUP19-0003 for Commnet of Nevada LLC, having made all five findings in accordance with Washoe County Code Section 110.810.30.

(Motion with Findings on Page 12)

Staff Report Contents

Special Use Permit 3
Noticing Map 4
Site Plan and Coverage Maps 5
Project Evaluation 10
Gerlach/Empire Citizen Advisory Board (GECAB) 10
Reviewing Agencies 10
Recommendation 12
Motion 12
Appeal Process 12

Exhibits Contents

Conditions of Approval ..... Exhibit A
Agency Comments ..... Exhibit B
Public Comment Letters (1) ..... Exhibit C
Public Notice ..... Exhibit D
Project Application ..... Exhibit E
Executive Order 2018-32 ..... Exhibit F

Special Use Permit

The purpose of a Special Use Permit is to allow a method of review to identify any potential harmful impacts on adjacent properties or surrounding areas for uses that may be appropriate within a regulatory zone; and to provide for a procedure whereby such uses might be permitted by further restricting or conditioning them so as to mitigate or eliminate possible adverse impacts. If the Board of Adjustment grants an approval of the Special Use Permit, that approval is subject to Conditions of Approval. Conditions of Approval are requirements that need to be completed during different stages of the proposed project. Those stages are typically:

- Prior to permit issuance (i.e. a grading permit, a building permit, etc.)
- Prior to obtaining a final inspection and/or a certificate of occupancy on a structure
- Prior to the issuance of a business license or other permits/licenses
- Some Conditions of Approval are referred to as "Operational Conditions." These conditions must be continually complied with for the life of the business or project.

The Conditions of Approval for Special Use Permit Case Number WSUP19-0003 are attached to this staff report and will be included with the Action Order.

The subject property is designated as General Rural (GR). The proposed use of a 150 foot tall monopole which is classified as a Wireless Communication Facility per Article 324 of the Washoe County Development Code is permitted in GR with a Special Use Permit (SUP) per WCC Section 110.324.50(e)(2). Therefore, the applicant is seeking approval of this SUP from the Board of Adjustment.

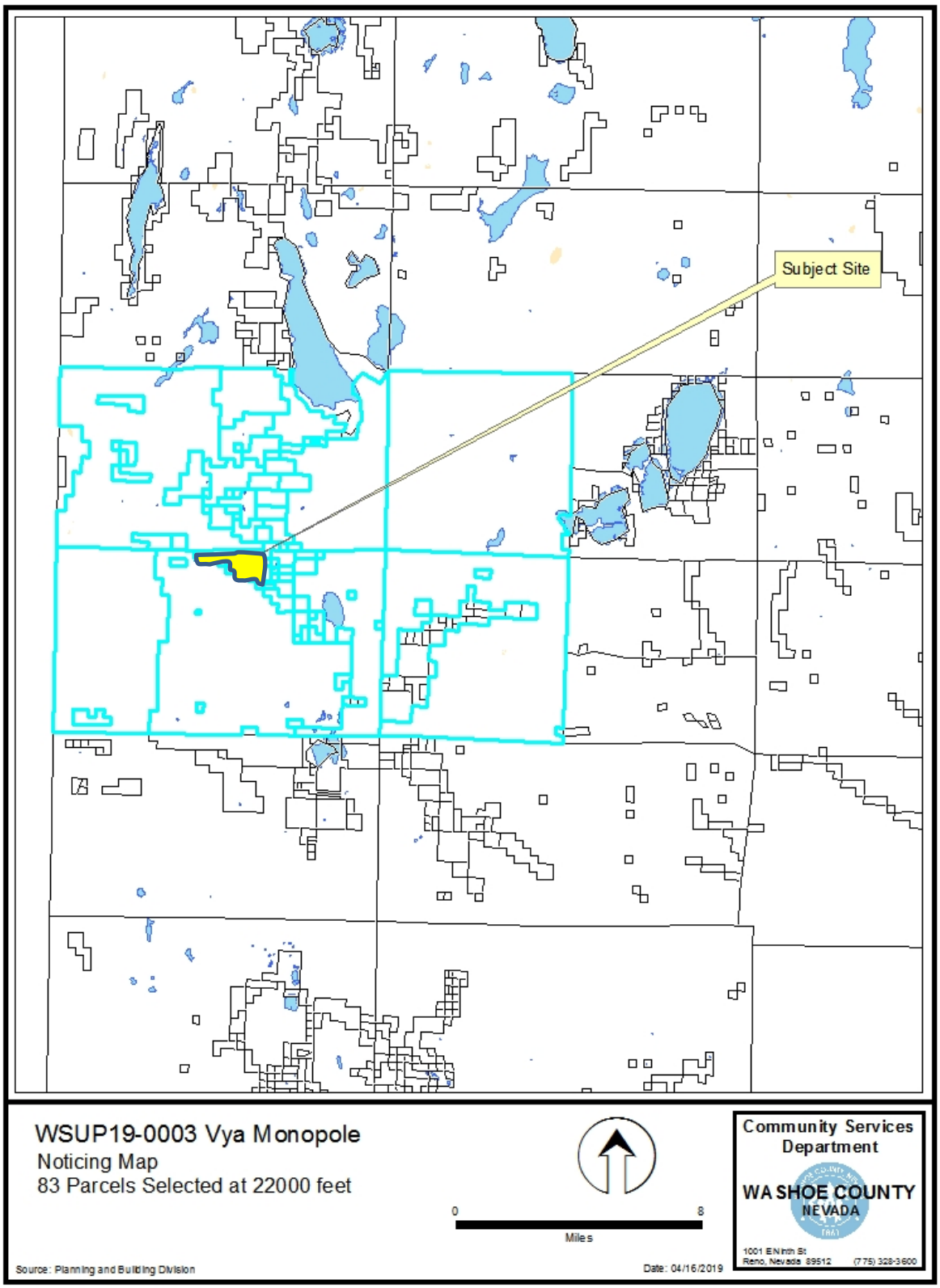

Noticing Map

PARENT PARCEL LEGAL DESCRIPTION

LYING WITHIN SECTION 5, TOWNSHIP 42 NORTH, RANGE 19 EAST, M.D.M., WASHOE COUNTY, NEVADA.

OWNERSHIP INFORMATION

OWNER – UNITED STATES OF AMERICA
CONTACT – N/A

ASSESSOR'S PARCEL NUMBER = 061–010–49
VESTING DOCUMENT = N/A

TITLE REPORT DATA AND EXCEPTIONS

NO TITLE REPORT PROVIDED.

BASIS OF BEARINGS

GRID NORTH BASED UPON THE NORTH AMERICAN DATUM OF 1983/94 (2011), NEVADA WEST ZONE (2703) COORDINATES PROVIDED BY OPUS SOLUTION; THE DISTANCES ARE BASED ON A GROUND SCALE FACTOR OF 1.0002506172 REFERENCED FROM A POINT NEAR THE PROJECT WITH A LATITUDE OF 41°35'30.19834" N AND A LONGITUDE OF 119°52'47.01529" W AND A NORTH AMERICAN VERTICAL DATUM OF 1988 HEIGHT OF 6167.50 FEET USING GEOID12A

PROPOSED TOWER COORDINATES

NAD 83 LATITUDE = 41°35'30.76358" N
LONGITUDE = 119°52'47.14752" W

SITE GROUND ELEVATION = 6236.20'

STATE PLANE COORDINATES NAD 83, NEVADA WEST ZONE

METERS (GROUND) – NORTHING – 4760184.649
EASTING – 691916.598
FEET (GROUND) – NORTHING – 15617372.47
EASTING = 2270063.04

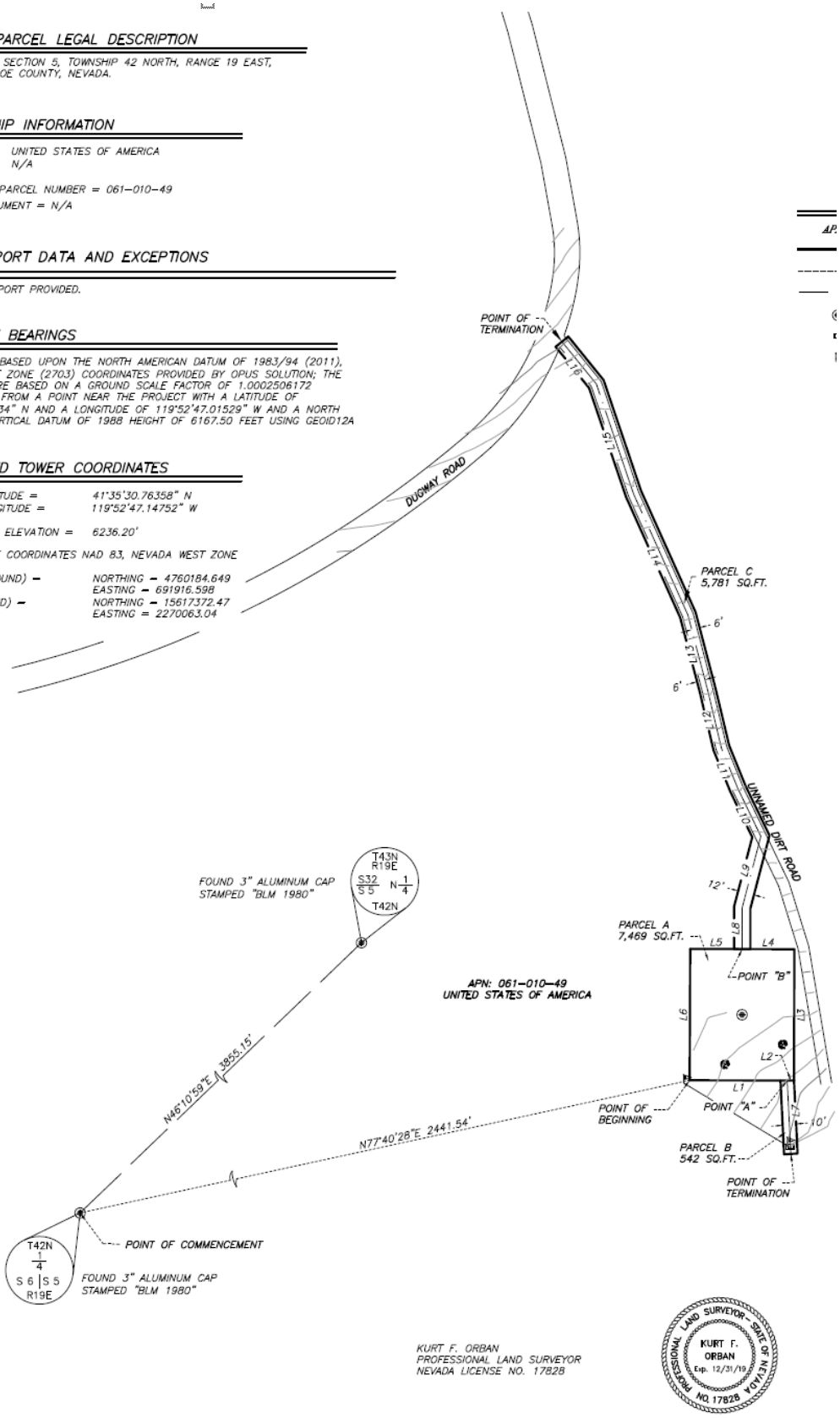

KURT F. ORBAN
PROFESSIONAL LAND SURVEYOR
NEVADA LICENSE NO. 17828

PROFESSIONAL LAND SURVEYOR – STATE OF NEVADA
KURT F. ORBAN
Exp. 12/31/19
NO. 17828

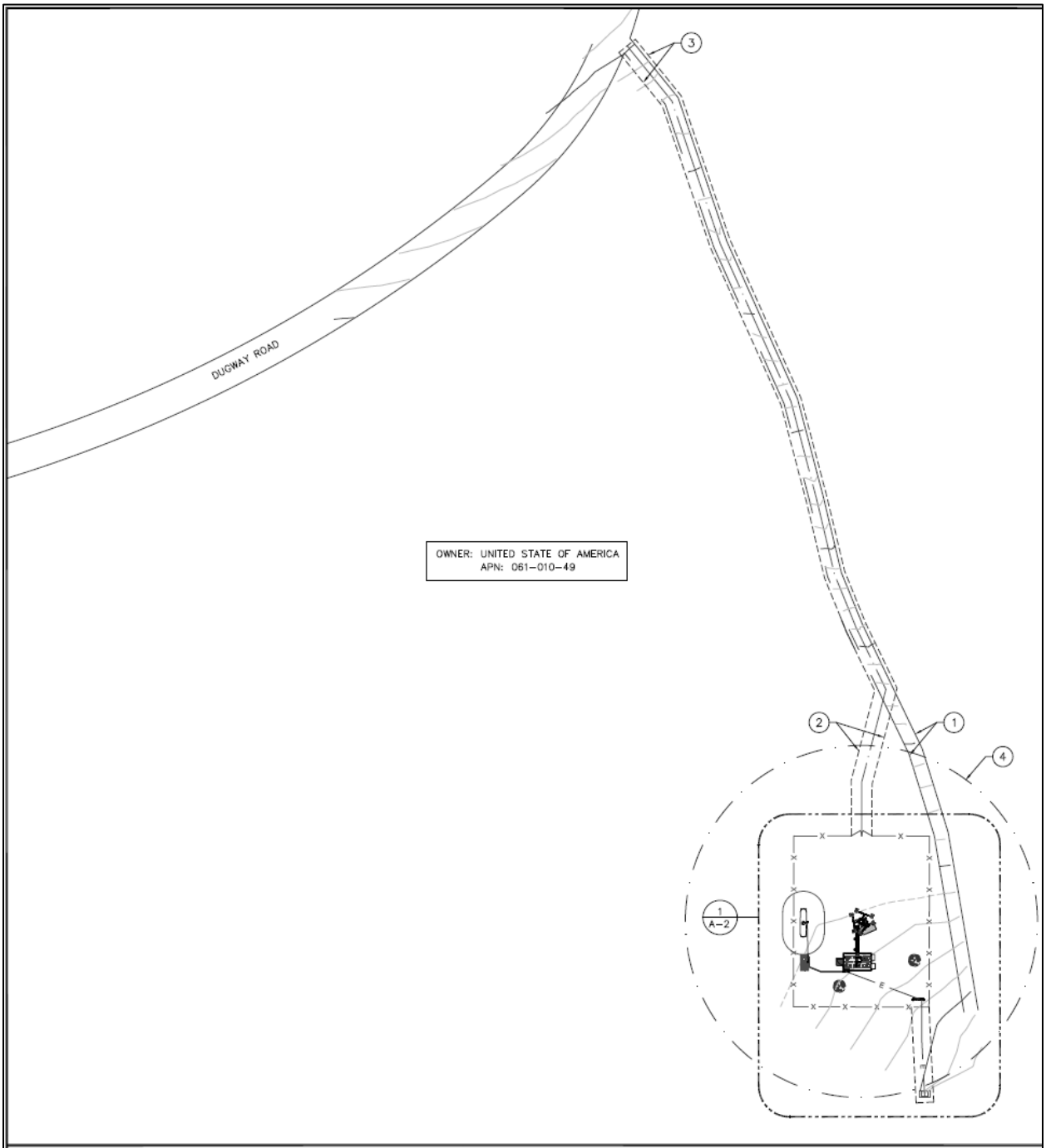

OVERALL SITE PLAN

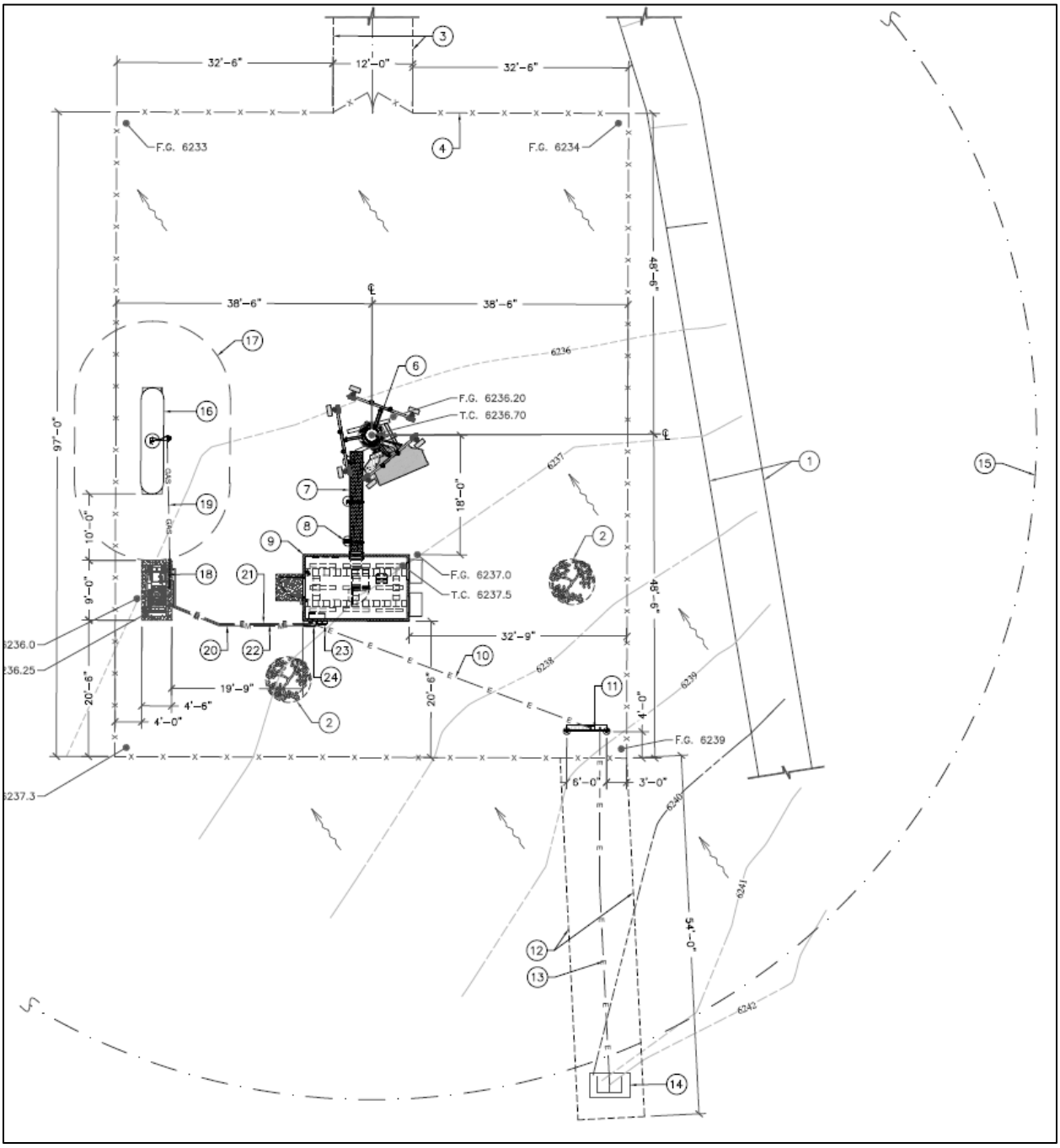
32'-6"
12'-0"
32'-6"
F.G. 6233
F.G. 6234
38'-6"
38'-6"
48'-6"
97'-0"
F.G. 6236.20
T.C. 6236.70
18'-0"
F.G. 6237.0
T.C. 6237.5
32'-9"
48'-6"
10'-0"
9'-0"
20'-6"
19'-9"
4'-6"
4'-0"
20'-6"
4'-0"
F.G. 6239
6'-0"
3'-0"
54'-0"
6236.0
6236.25
6237.3
6236
6237
6238
6239
6240
6241
6242

Site Plan

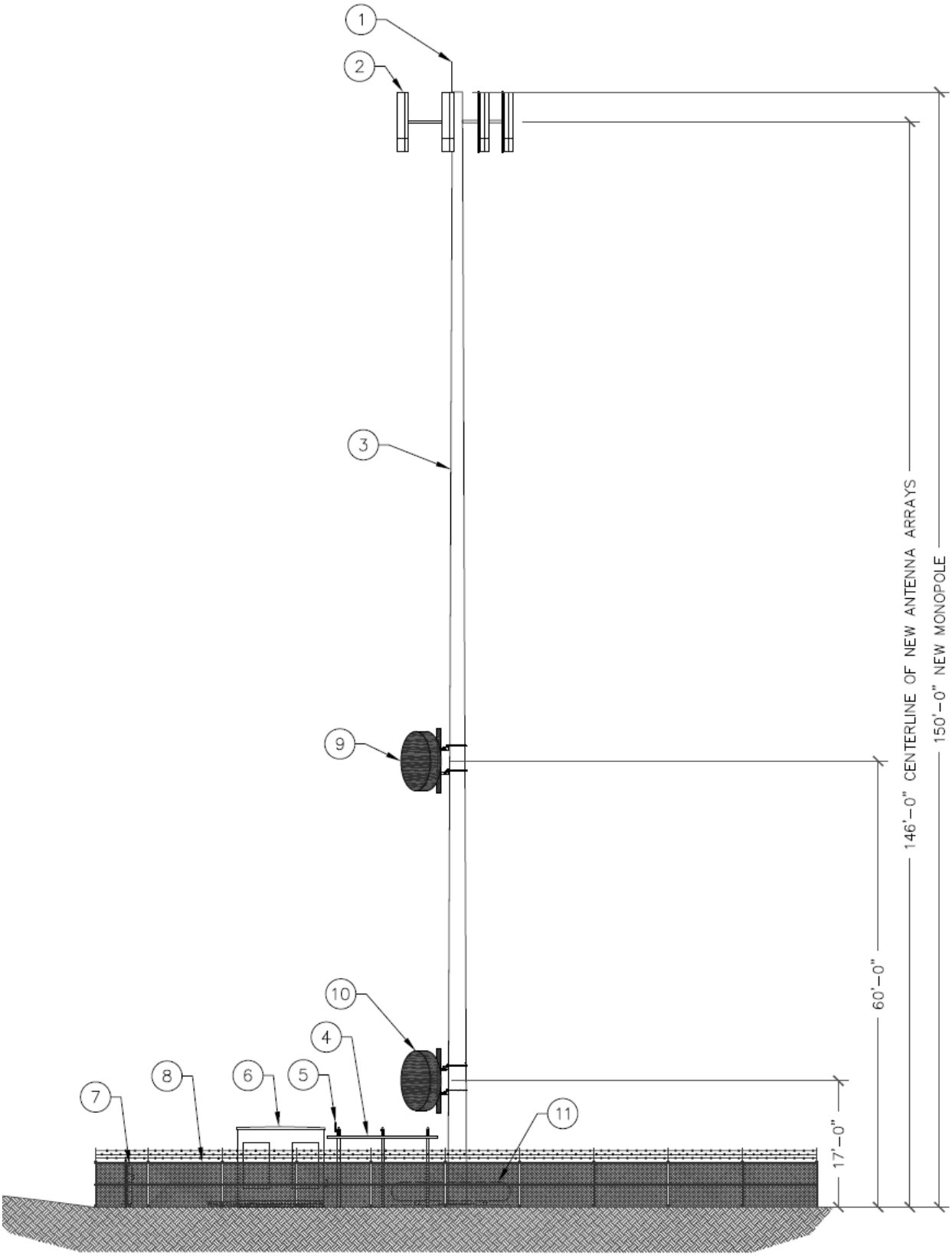

Proposed Elevations

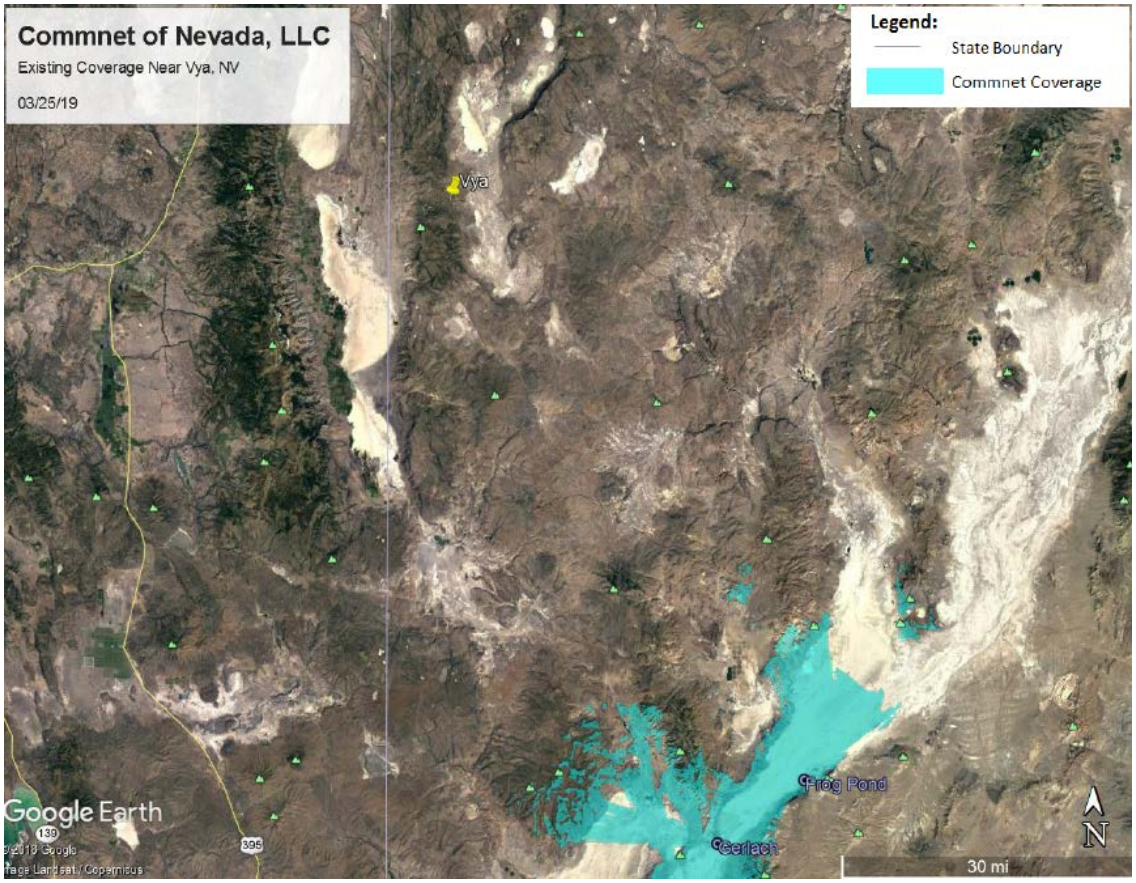

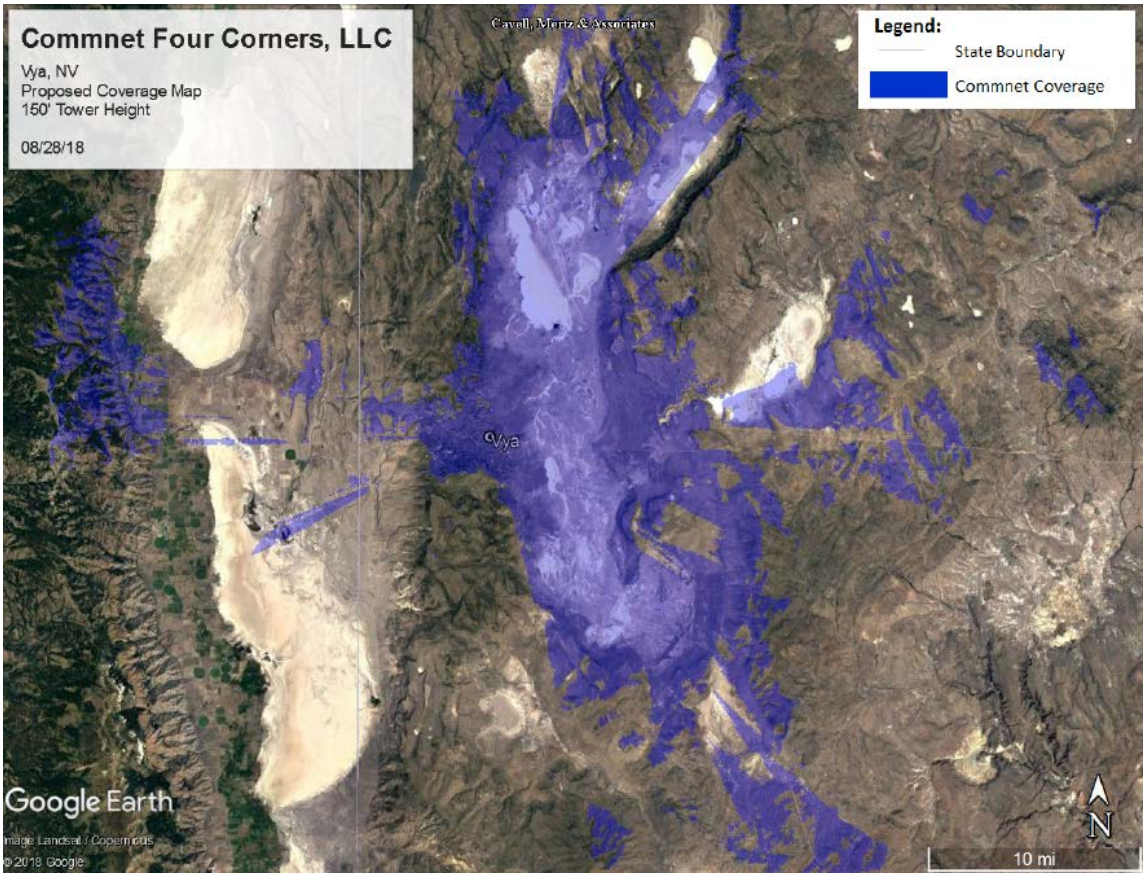

Coverage Map

Project Evaluation

Commnet of Nevada has requested this special use permit in order to place an unmanned wireless telecommunications monopole with all necessary appurtenances upon the subject property. The project site is located ±70 miles northwest of Gerlach at 8900A Dugway Road, within the High Desert planning area. The 150-foot tall monopole will be equipped with 6 antennas and will be able to accommodate future collocations. Proposed are two (2) sectors, each accommodating two (2) antennas; six (6) remote radio heads (RRU), two (2) microwave dishes, a 10' x 16' pre-fabricated equipment shelter on a 10' x 16' concrete pad, and a 45kw stand-by backup diesel generator; and all necessary ancillary equipment thereto.

The applicant worked with the Bureau of Land Management (BLM) and explored the possibility of locating at three alternate sites as well as collocating existing sites. All alternate sites proved not to be viable.

The project area will encompass roughly 7,469 square feet with the monopole and all equipment placed within the enclosed/fenced project area. The enclosure will be screened with a chain link 6-foot fence with a 1-foot barbed wire topper. The project site is ±2,000 feet from the State Route 8A, ±450 feet from the nearest road and more than a mile from the nearest residence. The applicant states there are minimal effects to aesthetics for the area. The pole will be constructed of a non-reflective galvanized steel pole. The applicant is requesting to vary development code requirements to waive all landscaping requirements per Article 412 requires landscaping for commercial uses. Due to the remoteness of the project, water supply being difficult to attain and limited development in the area, the requirement for safety and aesthetic design are not reasonable.

The monopole overall height is proposed to be ±150.0 feet tall to top of pole. Section 110.324.40 through 110.324.75 of the Washoe County Code (Table 110.324.50.1) allows heights of over 100 feet when the monopole is located over 2,000 feet from a residentially zoned property or public paved right of way.

Gerlach/Empire Citizen Advisory Board (GECAB)

The proposed project was presented at the regularly scheduled Citizen Advisory Board meeting on May 09, 2019. The comment below reflects discussion on this item:

- The project received supporting comments.
- Commenters called for an increase to the proposed coverage

Reviewing Agencies

The following agencies received a copy of the project application for review and evaluation.

- Washoe County Community Services Department
  - Planning and Building Division
  - Engineering and Capital Projects Division
  - Operations
- Washoe County Health District
  - Air Quality
  - Environmental Health Services Division
  - Emergency Medical Services
- Washoe County Regional Animal Services
- Washoe County Sheriff
- Truckee Meadows Fire Protection District
- Regional Transportation Commission
- Nevada Department of Wildlife

- Nevada Department of Environmental Protection
- Nevada Historic Preservation
- U.S. Fish and Wildlife

Five out of the ten above listed agencies/departments provided comments and/or recommended conditions of approval in response to their evaluation of the project application. A **summary** of each agency's comments and/or recommended conditions of approval and their contact information is provided. The Conditions of Approval document is attached to this staff report and will be included with the Action Order.

- Washoe County Planning and Building Division imposed operational conditions that will be in effect for the life of the project.

  Contact: Jacob Parker, 775.328.3628, jparker@washoecounty.us

- Washoe County Engineering and Capital Projects addressed the general requirements of building on the site and observing the easements on the parcel when placing the dwelling.

  Contact: Leo Vesely, 775.328.2313, lvesely@washoecounty.us

- Washoe County Planning and Building Division: Parks and Open Space addressed revegetation of the developed site.

  Contact: Sophia Kirschenman, 775.328.3623, skirschenman@washoecounty.us

- Nevada Department of Wildlife expressed concerns about Sage Grouse in the area and avenues to address those concerns.

  Contact: Mark Freese, 775.688.1145, markfreese@ndow.org

- United States Bureau of Land Management stated the agency would be coordinating with NDOW on monitoring plans for local wildlife, specifically Sage Grouse.

  Contact: Craig Drake, 530.233.7904, cdrake@blm.gov

Staff Comment on Required Findings

WCC Section 110.810.30, Article 810, *Special Use Permits*, requires that all of the following findings be made to the satisfaction of the Washoe County Board of Adjustment before granting approval of the request. Staff has completed an analysis of the special use permit application and has determined that the proposal is in compliance with the required findings as follows.

1. Consistency. That the proposed use is consistent with the action programs, policies, standards and maps of the Master Plan and the High Desert Area Plan.

   Staff Comment: Staff has reviewed the Master Plan and the Forest Area Plan and has not identified any provisions that are offended by the project.

2. Improvements. That adequate utilities, roadway improvements, sanitation, water supply, drainage, and other necessary facilities have been provided, the proposed improvements are properly related to existing and proposed roadways, and an adequate public facilities determination has been made in accordance with Division Seven.

   Staff Comment: The proposed project is in compliance with Division Seven.

3. Site Suitability. That the site is physically suitable for a telecommunications facility (monopole), and for the intensity of such a development.

   Staff Comment: The site is suitable for a telecommunications facility.

4. Issuance Not Detrimental. That issuance of the permit will not be significantly detrimental to the public health, safety or welfare; injurious to the property or improvements of adjacent properties; or detrimental to the character of the surrounding area.

Staff Comment: Based on the requirements of the FCC, the "Electromagnetic Frequency (RF) exposure level due to the proposed site is well below the maximum allowable by FCC Regulations. The site fully complies with FCC rules and regulations.

5. Effect on a Military Installation. Issuance of the permit will not have a detrimental effect on the location, purpose or mission of the military installation.

   Staff Comment: There is no military installation nearby.

Recommendation

Those agencies which reviewed the application recommended conditions in support of approval of the project. Therefore, after a thorough analysis and review, Special Use Permit Case Number WSUP19-0003 is being recommended for approval with conditions. Staff offers the following motion for the Board's consideration.

Motion

I move that, after giving reasoned consideration to the information contained in the staff report and information received during the public hearing, the Washoe County Board of Adjustment approve with conditions Special Use Permit Case Number WSUP19-0003 for Commnet of Nevada LLC, having made all five findings in accordance with Washoe County Code Section 110.810.30:

1. Consistency. That the proposed use is consistent with the action programs, policies, standards and maps of the Master Plan and the High Desert Area Plan;
2. Improvements. That adequate utilities, roadway improvements, sanitation, water supply, drainage, and other necessary facilities have been provided, the proposed improvements are properly related to existing and proposed roadways, and an adequate public facilities determination has been made in accordance with Division Seven;
3. Site Suitability. That the site is physically suitable for a telecommunications facility (monopole), and for the intensity of such a development;
4. Issuance Not Detrimental. That issuance of the permit will not be significantly detrimental to the public health, safety or welfare; injurious to the property or improvements of adjacent properties; or detrimental to the character of the surrounding area;
5. Effect on a Military Installation. Issuance of the permit will not have a detrimental effect on the location, purpose or mission of the military installation.

Appeal Process

Board of Adjustment action will be effective 10 calendar days after the written decision is filed with the Secretary to the Board of Adjustment and mailed to the applicant, unless the action is appealed to the Washoe County Board of County Commissioners, in which case the outcome of the appeal shall be determined by the Washoe County Board of County Commissioners. Any appeal must be filed in writing with the Planning and Building Division within 10 calendar days from the date the written decision is filed with the Secretary to the Board of Adjustment and mailed to the applicant.

Applicant:	Commnet of Nevada LLC 1562 North Park St. Castle Rock, CO 80109
Owner:	United States of America – BLM 2550 Riverside Dr. Susanville, CA 96130

Conditions of Approval

Special Use Permit Case Number WSUP19-0003

The project approved under Special Use Permit Case Number WSUP19-0003 shall be carried out in accordance with the Conditions of Approval granted by the Board of Adjustment on June, 06 2019. Conditions of Approval are requirements placed on a permit or development by each reviewing agency. These Conditions of Approval may require submittal of documents, applications, fees, inspections, amendments to plans, and more. These conditions do not relieve the applicant of the obligation to obtain any other approvals and licenses from relevant authorities required under any other act.

Unless otherwise specified, all conditions related to the approval of this Special Use Permit shall be met or financial assurance must be provided to satisfy the conditions of approval prior to issuance of a grading or building permit. The agency responsible for determining compliance with a specific condition shall determine whether the condition must be fully completed or whether the applicant shall be offered the option of providing financial assurance. All agreements, easements, or other documentation required by these conditions shall have a copy filed with the County Engineer and the Planning and Building Division.

Compliance with the conditions of approval related to this Special Use Permit is the responsibility of the applicant, his/her successor in interest, and all owners, assignees, and occupants of the property and their successors in interest. Failure to comply with any of the conditions imposed in the approval of the Special Use Permit may result in the institution of revocation procedures.

Washoe County reserves the right to review and revise the conditions of approval related to this Special Use Permit should it be determined that a subsequent license or permit issued by Washoe County violates the intent of this approval.

For the purpose of conditions imposed by Washoe County, “may” is permissive and “shall” or “must” is mandatory.

Conditions of Approval are usually complied with at different stages of the proposed project. Those stages are typically:

- Prior to permit issuance (i.e., grading permits, building permits, etc.).
- Prior to obtaining a final inspection and/or a certificate of occupancy.
- Prior to the issuance of a business license or other permits/licenses.
- Some “Conditions of Approval” are referred to as “Operational Conditions.” These conditions must be continually complied with for the life of the project or business.

The Washoe County Commission oversees many of the reviewing agencies/departments with the exception of the following agencies.

- **The DISTRICT BOARD OF HEALTH, through the Washoe County Health District, has jurisdiction over all public health matters in the Health District. Any conditions set by the Health District must be appealed to the District Board of Health.**

- **The RENO-TAHOE AIRPORT AUTHORITY is directed and governed by its own Board. Therefore, any conditions set by the Reno-Tahoe Airport Authority must be appealed to their Board of Trustees.**

- **The REGIONAL TRANSPORTATION COMMISSION (RTC) is directed and governed by its own board. Therefore, any conditions set by the Regional Transportation Commission must be appealed to that Board.**

FOLLOWING ARE CONDITIONS OF APPROVAL REQUIRED BY THE REVIEWING AGENCIES. EACH CONDITION MUST BE MET TO THE SATISFACTION OF THE ISSUING AGENCY.

Washoe County Planning and Building Division

1. The following conditions are requirements of Planning and Building, which shall be responsible for determining compliance with these conditions.

   Contact Name – Jacob Parker (775) Phone Number, jparker@washoecounty.us

   a. The applicant shall attach a copy of the Action Order approving this project to all administrative permit applications (including building permits) applied for as part of this special use permit.

   b. The applicant shall demonstrate substantial conformance to the plans approved as part of this special use permit. The Planning and Building Division shall determine compliance with this condition.

   c. The applicant shall demonstrate conformance to State of Nevada Executive Order 2018-32, Order Establishing Use of the Nevada Greater Sage-Grouse Conservation Plan and Credit System. The Planning and Building Division shall determine compliance with this condition.

   d. The applicant shall submit complete construction plans and building permits shall be issued within two years from the date of approval by Washoe County. The applicant shall complete construction within the time specified by the building permits. Compliance with this condition shall be determined by the Planning and Building Division.

   e. All existing trees and landscaping removed as part of the construction of this facility shall be replaced at the rate of two trees for each tree removed and two bushes for each bush removed.

   f. The monopole tower shall not exceed 150 feet in maximum height, as approved under this special use permit WSPU19-0003.

   g. A note shall be placed on all construction drawings and grading plans stating:

   NOTE

   Should any prehistoric or historic remains/artifacts be discovered during site development, work shall temporarily be halted at the specific site and the State Historic Preservation Office of the Department of Museums, Library and Arts shall be notified to record and photograph the site. The period of temporary delay shall be limited to a maximum of two (2) working days from the date of notification.

h. Prior to the issuance of a building permit, the applicant shall provide a certification by a professional that the facility complies with Federal Communications Commission (FCC) regulations for Radio Frequency Emissions (RFE).

i. Prior to the issuance of a building permit the applicant shall record a statement of assurance that the wireless communications facility shall be removed if the use of the facility is discontinued for a period of twelve (12) consecutive months.

j. All new fencing installed as part of this project shall include slats and provide at least 75% visual screening. Slats shall be of a color to match the surrounding buildings. Fencing materials shall be non-reflective.

k. The following **Operational Conditions** shall be required for the life of the unmanned wireless telecommunications monopole.

   i. This special use permit shall remain in effect until or unless it is revoked or is inactive for one year.

   ii. Failure to comply with the Conditions of Approval shall render this approval null and void. Compliance with this condition shall be determined by the Planning and Building Division.

   iii. The applicant and any successors shall direct any potential purchaser/operator of the site and/or the special use permit to meet with the Planning and Building Division staff to review Conditions of Approval prior to the final sale of the site and/or the special use permit. Any subsequent purchaser/operator of the site and/or the special use permit shall notify the Planning and Building Division of the name, address, telephone number, and contact person of the new purchaser/operator within 30 days of the final sale.

<u>Washoe County Engineering and Capital Projects</u>

2. The following conditions are requirements of the Engineering Division, which shall be responsible for determining compliance with these conditions.

   Contact Name – Leo Vesely and (775) 328-2041, lvesely@washoecounty.us

   a. A complete set of construction improvement drawings, including an on-site grading plan, shall be submitted when applying for a building/grading permit. Grading shall comply with best management practices (BMP's) and shall include detailed plans for grading, site drainage, erosion control (including BMP locations and installation details), slope stabilization, and mosquito abatement. Placement or removal of any excavated materials shall be indicated on the grading plan. Silts shall be controlled on-site and not allowed onto adjacent property.

   b. The applicant shall provide documentation of easements for the lease area, access and utilities. A copy of the easements shall be submitted to the Engineering Division prior to the approval of a building permit.

   c. All existing and proposed easements shall be shown on the site and/or grading plan.

*** End of Conditions ***

WASHOE COUNTY
COMMUNITY SERVICES DEPARTMENT
Engineering and Capital Projects

1001 EAST 9TH STREET
RENO, NEVADA 89512
PHONE (775) 328-3600
FAX (775) 328.3699

Date: May 3, 2019

To: Jacob Parker, Planner

From: Leo Vesely, P.E., Licensed Engineer

Re: Special Use Permit Case ***WSUP19-0003 – Vya Monopole***
APN 061-010-49

GENERAL PROJECT DISCUSSION

Washoe County Engineering staff has reviewed the above referenced application. The Special Use Permit is for the construction of a 150 foot high monopole on the site. The Engineering and Capital Projects Division recommends approval with the following comments and conditions of approval which supplement applicable County Code and are based upon our review of the site and the application prepared by the Rubicon Design Group. The County Engineer shall determine compliance with the following conditions of approval.

For questions related to sections below, please see the contact name provided.

GENERAL CONDITIONS

Contact Information: Leo Vesely, P.E. (775) 328-2041

1. A complete set of construction improvement drawings, including an on-site grading plan, shall be submitted when applying for a building/grading permit. Grading shall comply with best management practices (BMP's) and shall include detailed plans for grading, site drainage, erosion control (including BMP locations and installation details), slope stabilization, and mosquito abatement. Placement or removal of any excavated materials shall be indicated on the grading plan. Silts shall be controlled on-site and not allowed onto adjacent property.
2. The applicant shall provide documentation of easements for the lease area, access and utilities. A copy of the easements shall be submitted to the Engineering Division prior to the approval of a building permit.
3. All existing and proposed easements shall be shown on the site and/or grading plan.

DRAINAGE (COUNTY CODE 110.416, 110.420, and 110.421)
Contact Information: Walt West, P.E. (775) 328-2310

1. No comments.

TRAFFIC AND ROADWAY (COUNTY CODE 110.436)
Contact Information: Mitch Fink, (775) 328-2050

1. No comments.

UTILITIES (County Code 422 & Sewer Ordinance)
Contact Information: Tim Simpson, P.E. (775) 954-4648

1. No comments

Truckee Meadows Fire Protection District (TMFPD)

1. The following conditions are requirements of the Truckee Meadows Fire Protection District, which shall be responsible for determining compliance with these conditions. Unless otherwise stated, these conditions shall be met prior to the issuance of any building or grading permit or on an ongoing basis as determined by TMFPD.

   Contact Name – Don Coon, 775.326.6077, Dcoon@tmfpd.us

   a. Fire protection of the new structures shall be as required by the current adopted International Fire Code, (*IFC*) International Wildland Urban Interface Code (*IWUIC*) 2012 *Ed,* with amendments and the requirements of the NFPA standard(s). (https://codes.iccsafe.org/content/IWUIC2012 https://codes.iccsafe.org/content/IFC2012)

   b. Provide a Vegetation selection, installation, management and Defensible Space Plan as required for the project in accordance with the requirements of the *IWUIC.*

   c. The length of the road appears to be in excess of 200 feet and would require a 20' width as a Fire Apparatus Access Road, with no greater than 10% grade. IWUIC 403.3. and 403.7

   d. Provide a 20' gate opening with a TMFPF approved access gate locking device per IFC D103.5

From:	Katie Andrle
To:	Mark Freese; Drake, Craig; Parker, Jacob
Cc:	Timothy Bowden; Jasmine Kleiber; Lloyd, Trevor; Ryan, Daniel
Subject:	RE: [EXTERNAL] RE: April Agency Review Memo II - Vya Monopole
Date:	Friday, May 17, 2019 12:04:18 PM
Attachments:	image001.png image002.png image003.png image004.png image005.png

---

[**NOTICE:** This message originated outside of Washoe County -- **DO NOT CLICK** on **links** or open **attachments** unless you are sure the content is safe.]

Thanks Mark,

The SETT has also develop Regulations to provide additional implementation guidance to the Executive Order that has been approved and will be filed with the Secretary of State in the next few weeks. I will forward the final regulations when they are available.

Thanks and have a great weekend!

Katie

From: Mark Freese <markfreese@ndow.org>
Sent: Friday, May 17, 2019 8:24 AM
To: Drake, Craig <cdrake@blm.gov>; Parker, Jacob <JParker@washoecounty.us>
Cc: Timothy Bowden <tbowden@blm.gov>; Katie Andrle <kandrle@sagebrusheco.nv.gov>; Jasmine Kleiber <jkleiber@ndow.org>; Lloyd, Trevor <TLloyd@washoecounty.us>; Ryan, Daniel <dryan@blm.gov>
Subject: RE: [EXTERNAL] RE: April Agency Review Memo II - Vya Monopole

Thanks Craig and Jacob for your explanations.

Please find attached Executive Order 2018-32, requiring the proponent to work with the Sagebrush Ecosystem Program.

Thank you,
Mark

From: Drake, Craig <cdrake@blm.gov>
Sent: Wednesday, May 15, 2019 8:53 AM
To: Parker, Jacob <JParker@washoecounty.us>
Cc: Mark Freese <markfreese@ndow.org>; Timothy Bowden <tbowden@blm.gov>; Katie Andrle <kandrle@sagebrusheco.nv.gov>; Jasmine Kleiber <jkleiber@ndow.org>; Lloyd, Trevor <TLloyd@washoecounty.us>; Ryan, Daniel <dryan@blm.gov>
Subject: Re: [EXTERNAL] RE: April Agency Review Memo II - Vya Monopole

All,

Some of the other sites considered would have been far more detrimental to Sage Grouse. The BLM will be working with the SETT on this project as we consider their right of way package. We have not yet received a completed application package from the company, but we have had a pre-application meeting with them and anticipate receiving the completed package soon.

Craig R. Drake
Field Manager
Applegate Field Office
530-233-7904

On Wed, May 15, 2019 at 8:43 AM Parker, Jacob <JParker@washoecounty.us> wrote:

> Thank you for your comments Mr. Freese.
>
> I'll try to address everything you brought up. Forgive my stout language in below, the vernacular we use on these cases can sound sharp.
>
> The applicant has attempted to locate on several alternate sites in coordination with BLM. This is the site that all parties determined filled the criteria. To be frank, unless an agency can provide grounds for denial, this case and special use permit is for the site as described.
>
> Reading through your response, the only requirements I see you mention is that the applicant work with the SAGEBRUSH ECOSYSTEM PROGRAM through the state of Nevada, specifically Ms. Andrle. Am I on the mark there?
> **Now is this a legal requirement?** In order to include this as a condition in the special use permit, I would need to reference what specific legal statute/code/etc. compels the applicant to comply.
>
> Thanks,
>
> **Jacob Parker**
> **Planner | Planning and Building Division | Community Services Department**
> jparker@washoecounty.us | Office: 775.328.3628 | Fax: 775.328.6133
> 1001 East Ninth Street, Reno, NV 89512
>
> ---
>
> **From:** Mark Freese [mailto:markfreese@ndow.org]
> **Sent:** Tuesday, May 07, 2019 10:11 AM
> **To:** Parker, Jacob
> **Cc:** Timothy Bowden; Drake, Craig; Katie Andrle; Jasmine Kleiber
> **Subject:** RE: April Agency Review Memo II - Vya Monopole
>
> [**NOTICE:** This message originated outside of Washoe County -- **DO NOT CLICK** on **links** or

open **attachments** unless you are sure the content is safe.]

Mr. Parker,

The Vya monopole site is Greater Sage-grouse, bighorn sheep, mule deer and other wildlife habitat. Our knowledge of Greater sage-grouse use in this area is limited. We know the private meadows on the north side of Forty-nine Mountain are utilized by hundreds of sage-grouse during the brood-rearing season; however, the nearest known leks are greater than 10 miles away. As such, we believe we are missing lek(s) in this general area. Knowing that this area holds a high density of sage-grouse at least seasonally, we recommend exploring opportunities to site this project in another area of lesser value to sage-grouse as sage-grouse tend to avoid tall, vertical structures. We are available to help assist in the siting process to ensure it is sited to minimize impacts to sage-grouse and other wildlife. If you cannot relocate the project, we recommend monitoring, eliminating and reducing opportunities to attract and provide nesting, cover or perches for predators. Furthermore, The Sagebrush Ecosystem Technical Team (SETT) will require the project to be analyzed and mitigated using the Credit Conservation System. The SETT can also help run siting scenarios to minimize the threat and any subsequent mitigation. Please contact Katie Anderle at kandrle@sagebrusheco.nv.gov -775 684-8600 for more information.

Thank you,

Mark Freese, Habitat Biologist
Nevada Department of Wildlife
1100 Valley Road
Reno, Nevada 89512
(775) 688-1145
markfreese@ndow.org

Support Nevada's Wildlife…Buy a Hunting and Fishing License

State of Nevada Confidentiality Disclaimer: *This message is intended only for the named recipient. If you are not the intended recipient you are notified that disclosing, copying, distributing or taking any action in reliance on the contents of this information is strictly prohibited.*

From: Stark, Katherine <KRStark@washoecounty.us>
Sent: Thursday, April 18, 2019 3:45 PM
To: Mark Freese <markfreese@ndow.org>
Cc: Stark, Katherine <KRStark@washoecounty.us>; Emerson, Kathy <KEmerson@washoecounty.us>
Subject: April Agency Review Memo II

Good afternoon,

Please find the attached Agency Review Memo with cases received in April by Washoe County Community Services Department, Planning and Building.

You've been asked to review the applications for **Items 1, 2 & 6**. The item descriptions and links to the applications are provided in the memo.

Please remember to send any agency review responses/comments directly to the Planner for the case, rather than replying to me.

Thank you!

Katy Stark
Office Support Specialist, Planning and Building Division | Community Services Department
krstark@washoecounty.us | Office: 775.328.3618 | Fax: 775.328.6133
1001 East Ninth Street, Bldg. A, Reno, NV 89512

MEMORANDUM

WASHOE COUNTY REGIONAL PARKS AND OPEN SPACE

PLANNING DIVISION

TO: **Jacob Parker, Planner**

FROM: **Sophia Kirschenman, Park Planner**

DATE: **May 8, 2019**

SUBJECT: **Special Use Permit Case Number WSUP19-0003 (Vya Monopole)**

Washoe County Regional Parks and Open Space has reviewed and prepared the following comments related to Special Use Permit Case Number WSUP19-0003:

The proposed monopole would be located in the area of Vya, Nevada and new development must conform to the policies included in the High Desert Area Plan. Due to the rural location of the proposed development, no parks or recreational amenities are proposed nearby. Staff notes that the applicant is requesting a variance to waive the traditional landscaping requirement due to the remote location of the subject parcel and lack of visibility to the general public. While those are important considerations, Washoe County Parks and Open Space would like to reiterate that landscaping requirements also serve to reduce heat, erosion, dust, and pollutants by increasing vegetation and to ensure that disturbed areas do not become populated with noxious weeds and invasive species. While irrigated landscaping may not be feasible in this location, ***Washoe County Parks and Open Space recommends that the applicant still be required to revegetate at least 20% of the total developed land area, utilizing hydroseeding or another strategy that does not require temporary irrigation***. Hydroseed applications should occur in November or December and if the appropriate vegetative coverage requirements are not realized, further hydroseeding should be required.

1001 E. 9th Street Reno, NV 89512 775.328.3623 skirschenman@washoecounty.us

From: Anthony Stobiecki
To: Parker, Jacob
Cc: Diane; Vya ConservationDistrict; Herman, Jeanne
Subject: Vya/Fox Monop[ole
Date: Tuesday, April 30, 2019 8:40:06 AM

[**NOTICE:** This message originated outside of Washoe County -- **DO NOT CLICK** on **links** or open **attachments** unless you are sure the content is safe.]

Hello Mr. Parker,

This effort is great news! I/we have been working with the BLM, Washoe and Modoc County (emergency services) and Dan Ryan in particular to get a 21st Century communication service solution here in Long Valley (Vya) for several years. We had also offered space for such a tower on our personal property as we have SVE power here that we trenched in.

In addition to being a ranch owner with cattle, I am the Vya Conservation District Board President, and my wife Diane represents Ms. Jeanne Herman on the board. The VCD covers the areas down to Gerlach as part of the Conservation District, so this is very good news. If there is anything we can do to help the cause, please let us know.

We will be having a board meeting in May and will pass on this news and contact info to our supporters and landowners here in NV as well as folks that have property here but live in another state.

I have viewed the coverage area on the application. Is there a better resolution map of the coverage areas for both Fox Mtn. and Vya?

Best regards,

Tony

Tony & Diane Stobiecki
Rockin' TD Ranch
102645 State Rt. 34,
Vya, NV 89412-6155
775-557-4001
Mailing:
POB 280 Cedarville,
CA 96104-0280
(m): 775-686-8518
(Diane m): 775-686-8102
www.RockinTDRanch.com

OFFICIAL NOTICE OF PUBLIC HEARING

DATE: May 24, 2019

You are hereby notified that the **Washoe County Board of Adjustment** will conduct a public hearing at the following time and location:

1:30 p.m., Thursday, June 6, 2019
County Commission Chambers, 1001 East Ninth Street, Reno, NV 89512

Special Use Permit Case Number WSUP19-0003 (Vya Monopole) – For possible action, hearing, and discussion to approve a special use permit for the installation and operation of a 150-foot tall monopole telecommunication facility with all necessary appurtenances/supporting equipment and facilities and to vary development code requirements for landscaping for a commercial use by waiving them for this project.

- Applicant: Commnet of Nevada LLC
- Property Owner: United States of America
- Location: Immediately north of State Route 8A, ±2 miles west of Fortynine Lake
- APN: 061-010-49
- Parcel Size: 773.89
- Master Plan: Rural (R)
- Regulatory Zone: General Rural (GR)
- Area Plan: High Desert
- Citizen Advisory Board: Gerlach/Empire
- Development Code: Authorized in Article 324, Communication Facilities and Article 810, Special Use Permits
- Commission District: 5 – Commissioner Herman
- Staff: Jacob Parker, Planner
Washoe County Community Services Department
Planning and Building Division
- Phone: 775-328-3628
- E-mail: jparker@washoecounty.us

As an owner of property in the vicinity, you are invited to present testimony relative to these matters.

To access additional information about this item, please visit our website at www.washoecounty.us/csd/planning_and_development/, choose **Boards and Commissions**, then **Board of Adjustment, Meetings, +2019**. Then click on the above referenced meeting date.

Original
WSUP 19-0003

April 10, 2019

Washoe County
Planning and Development Division
1001 E. Ninth Street
Reno, NV 89512
Attn: Jacob Parker

RE: Application for Special Use Permit and Director's Modification – Vya, NV 89000A Dugway Road, Gerlach, NV 89413

Please find attached a Special Use Permit and Director's Modification submittal applications for a new Commnet Wireless telecommunications facility located at the above referenced location. The submittal contains the following documents.

This application is for the April 15, 2109 submittal.

1. Filing Fee Check
2. Development Application
3. Owner's Affidavit
4. Project Support Statement
5. Director's Modification Application and Memorandum
5. Site Plans
6. Photosimulations
7. Coverage Maps
8. Radio Frequency Statement
9. Treasurer Statement
10. Site Photos
11. Flash Drive containing Application materials

If you have any questions or need additional materials, I can be reached at (314) 640-5182.

Sincerely,

Julie Krekeler
General Manager

Attachments

WSUP19-0003
EXHIBIT E

April 10, 2019

Washoe County
Planning and Development Division
1001 E. Ninth Street
Reno, NV 89512
Attn: Jacob Parker

RE: Application for Special Use Permit and Director's Modification – Vya, NV 89000A Dugway Road, Gerlach, NV 89413

On behalf of Commnet of Nevada, LLC (dba Commnet Wireless), I am submitting a Special Use Permit and Director's Modification submittal application for a new telecommunications facility located at the above referenced location on April 10, 2109 prior to the April 15 submittal date. Please accept this waiver for the submittal time frames and the 3 day completeness check.

If you have any questions or need additional materials, I can be reached at (314) 640-5182.

Sincerely,

Julie Krekeler
General Manager

WSUP19-0003
EXHIBIT E

Memorandum

To: Washoe County, NV

CC: Commnet of Nevada, LLC

From: Julie M. Hall, Senior RF Engineer, Centerline Solutions

Date: 03/27/19

Re: RF Emissions Analysis of Proposed Facility-Vya, NV

Commnet of Nevada is proposing to install a wireless telecommunications facility at Vya, NV, in Washoe County, at the following coordinates: 41° 35' 30.76" N, 119° 52' 47.15" W. The proposed installation was evaluated for RF Emissions compliance. The computations, analysis, and conclusions were based on applicable FCC guidelines and regulations for maximum permissible exposure to humans consistent with FCC OET Bulletin 65. At the time of installation, this facility will be transmitting at less than 2% of the applicable RF Emissions limits, thus the facility will be in compliance with applicable FCC regulations for RF Emissions. In addition, the analysis was completed with both existing capacity and future capacity, to insure compliance as the site grows in capacity.

Re-evaluation of the site for compliance would happen if other carriers locate at the facility, if the site grows beyond the capacity that the initial evaluation was completed for, or antennas at the site are changed or added to.

I certify that the analysis is correct to the best of my knowledge, and all calculations, assumptions and conclusions are based on generally acceptable engineering practices.

Julie M. Hall

Julie M. Hall
Senior RF Engineer
Centerline Solutions

Property Owner Affidavit

Applicant Name: Commnet of Nevada, LLC

The receipt of this application at the time of submittal does not guarantee the application complies with all requirements of the Washoe County Development Code, the Washoe County Master Plan or the applicable area plan, the applicable regulatory zoning, or that the application is deemed complete and will be processed.

STATE OF NEVADA)
)
COUNTY OF WASHOE)

I, CRAIG R. DRAKE,
(please print name)

being duly sworn, depose and say that I am the owner* of the property or properties involved in this application as listed below and that the foregoing statements and answers herein contained and the information herewith submitted are in all respects complete, true, and correct to the best of my knowledge and belief. I understand that no assurance or guarantee can be given by members of Planning and Building.

(A separate Affidavit must be provided by each property owner named in the title report.)

Assessor Parcel Number(s): 061-010-49

Printed Name CRAIG R. DRAKE

Signed [signature]

Address 708 W. 12th St.

Alturas, CA 96101

Subscribed and sworn to before me this _____ day of _____, _____.

(Notary Stamp)

See att. Jurat
Notary Public in and for said county and state

My commission expires: _____

*Owner refers to the following: (Please mark appropriate box.)

- ☐ Owner
- ☐ Corporate Officer/Partner (Provide copy of record document indicating authority to sign.)
- ☐ Power of Attorney (Provide copy of Power of Attorney.)
- ☐ Owner Agent (Provide notarized letter from property owner giving legal authority to agent.)
- ☐ Property Agent (Provide copy of record document indicating authority to sign.)
- ☒ Letter from Government Agency with Stewardship

CALIFORNIA JURAT WITH AFFIANT STATEMENT **GOVERNMENT CODE § 8202**

☒ See Attached Document (Notary to cross out lines 1–6 below)
☐ See Statement Below (Lines 1–6 to be completed only by document signer[s], *not* Notary)

1
2
3
4
5
6

Signature of Document Signer No. 1 *Signature of Document Signer No. 2 (if any)*

A notary public or other officer completing this certificate verifies only the identity of the individual who signed the document to which this certificate is attached, and not the truthfulness, accuracy, or validity of that document.

State of California
County of Modoc

L. L. GALVIN
Notary Public - California
Modoc County
Commission # 2268119
My Comm. Expires Dec 19, 2022

Subscribed and sworn to (or affirmed) before me on this 4 day of April, 2019,
Date *Month* *Year*
by
(1) Craig R. Drake
(and ~~(2)~~),
Name(s) of Signer(s)

proved to me on the basis of satisfactory evidence to be the person(s) who appeared before me.

Signature
Signature of Notary Public

Seal
Place Notary Seal Above

OPTIONAL

Though this section is optional, completing this information can deter alteration of the document or fraudulent reattachment of this form to an unintended document.

Description of Attached Document

Title or Type of Document: _____ Document Date: _____

Number of Pages: _____ Signer(s) Other Than Named Above: _____

©2014 National Notary Association • www.NationalNotary.org • 1-800-US NOTARY (1-800-876-6827) Item #5910

Washoe County Development Application

Your entire application is a public record. If you have a concern about releasing personal information, please contact Planning and Building staff at 775.328.6100.

Project Information	**Staff Assigned Case No.:** _____
Project Name: Commnet Wireless - Vya, NV	
Project Description: Commnet Wireless proposes the construction of a new unmanned wireless communication facility serving the Vya and surrounding area.	
Project Address: Washoe County E911 Assigned address: 89000A Dugway Road, Gerlach, NV 89413	
Project Area (acres or square feet): 7,469 sf lease area along with access and utility easements	
Project Location (with point of reference to major cross streets **AND** area locator): From Vya, NV, head north on CR 34 N (1.4 miles) continue straight onto Dugway Road (1.5) miles. Turn left onto unnamed dirt road to site.	

Assessor's Parcel No.(s):	Parcel Acreage:	Assessor's Parcel No.(s):	Parcel Acreage:
061-010-49	773.890015 acres		

Indicate any previous Washoe County approvals associated with this application:
Case No.(s). NA

Applicant Information (attach additional sheets if necessary)

Property Owner:		**Professional Consultant:**	
Name: United States of America - BLM		Name: CIS Communications, LLC	
Address: 2550 Riverside Drive		Address: 749 Old Ballas Road	
Susanville, CA	Zip: 96130	Creve Coeur, MO	Zip: 63141
Phone: (530) 252-5321	Fax:	Phone: (314) 569-2275	Fax:
Email: dryan@blm.gov		Email: julie@ciscomm.com	
Cell: (530) 252-5321	Other:	Cell: (314) 640-5182	Other:
Contact Person: Daniel Ryan - Realty Specialist		Contact Person: Julie Krekeler - General Manager	
Applicant/Developer:		**Other Persons to be Contacted:**	
Name: Commnet of Nevada, LLC (dba Commnet Wireless)		Name:	
Address: 1562 North Park Street		Address:	
Castle Rock, CO	Zip: 80109		Zip:
Phone: (720) 733-7854	Fax:	Phone:	Fax:
Email: cphillips@atni.com		Email:	
Cell: (720) 733-7854	Other:	Cell:	Other:
Contact Person: Cindy Phillips - Director of Real Estate/Regulatory		Contact Person:	

For Office Use Only

Date Received:	Initial:	Planning Area:	
County Commission District:		Master Plan Designation(s):	
CAB(s):		Regulatory Zoning(s):	

Special Use Permit Application
Supplemental Information

(All required information may be separately attached)

1. What is the project being requested?

Commnet Wireless' proposed installation of a new unmanned telecommunications facility consisting of a 150' monopole tower with antennas/dishes, equipment shelter, outdoor generator and LP tank.

2. Provide a site plan with all existing and proposed structures (e.g. new structures, roadway improvements, utilities, sanitation, water supply, drainage, parking, signs, etc.)

Refer to construction drawings attached.

3. What is the intended phasing schedule for the construction and completion of the project?

One phase - Construction would take between one and two months.

4. What physical characteristics of your location and/or premises are especially suited to deal with the impacts and the intensity of your proposed use?

Location is needed from an RF standpoint. Location is ideal from an impact standpoint as there is minimal to no visibility from any existing populated areas.

5. What are the anticipated beneficial aspects or affects your project will have on adjacent properties and the community?

Improved wireless coverage as well as wireless broadband coverage for the First Net emergency responders.

6. What are the anticipated negative impacts or affect your project will have on adjacent properties? How will you mitigate these impacts?

There are no negative impacts on adjacent properties or communities. Project is located in remote rural area.

7. Provide specific information on landscaping, parking, type of signs and lighting, and all other code requirements pertinent to the type of use being purposed. Show and indicate these requirements on submitted drawings with the application.

No landscaping, parking,or lighting proposed. All required signage to be attached to shelter door/fence. Please refer to Project Support Statement for explanations.

8. Are there any restrictive covenants, recorded conditions, or deed restrictions (CC&Rs) that apply to the area subject to the special use permit request? (If so, please attach a copy.)

❑ Yes	■ No

9. Utilities:

a. Sewer Service	NA
b. Electrical Service	Surprise Valley Electrification Corp.
c. Telephone Service	NA
d. LPG or Natural Gas Service	NA
e. Solid Waste Disposal Service	NA
f. Cable Television Service	NA
g. Water Service	NA

For most uses, Washoe County Code, Chapter 110, Article 422, Water and Sewer Resource Requirements, requires the dedication of water rights to Washoe County. Please indicate the type and quantity of water rights you have available should dedication be required.

h. Permit #		acre-feet per year	
i. Certificate #		acre-feet per year	
j. Surface Claim #		acre-feet per year	
k. Other #		acre-feet per year	

Title of those rights (as filed with the State Engineer in the Division of Water Resources of the Department of Conservation and Natural Resources).

Not applicable.

10. Community Services (provided and nearest facility):

a. Fire Station	Washoe Rural - Station T40
b. Health Care Facility	Nevada Health Center, Inc., Gerlach, NV
c. Elementary School	Gerlach K-12
d. Middle School	Gerlach K-12
e. High School	Gerlach K-12
f. Parks	Gerlach Community Park
g. Library	Gerlach Community Library
h. Citifare Bus Stop	NA

Washoe County Treasurer
Tammi Davis

Washoe County Treasurer
P.O. Box 30039, Reno, NV 89520-3039
ph: (775) 328-2510 fax: (775) 328-2500
Email: tax@washoecounty.us

Account Detail

Back to Account Detail | Change of Address | Print this Page

CollectionCart

Collection Cart	Items	Total	
	0	$0.00	Checkout View

Pay Online

No payment due for this account.

Washoe County Parcel Information

Parcel ID	Status	Last Update
06101049	Active	4/4/2019 2:07:19 AM

Current Owner:
UNITED STATES OF AMERICA

NONE
RENO, NV 00000

SITUS:
0 UNSPECIFIED
WASHOE COUNTY NV

Taxing District
9000

Geo CD:

Legal Description

Township 42 Section Lot Block Range 19 SubdivisionName _UNSPECIFIED

Tax Bill (Click on desired tax year for due dates and further details)

Tax Year	Net Tax	Total Paid	Penalty/Fees	Interest	Balance Due
2018	$0.00	$0.00	$0.00	$0.00	$0.00
2017	$0.00	$0.00	$0.00	$0.00	$0.00
2016	$0.00	$0.00	$0.00	$0.00	$0.00
2015	$0.00	$0.00	$0.00	$0.00	$0.00
2014	$0.00	$0.00	$0.00	$0.00	$0.00
				Total	$0.00

Disclaimer

- ALERTS: If your real property taxes are delinquent, the search results displayed may not reflect the correct amount owing. Please contact our office for the current amount due.
- For your convenience, online payment is available on this site. E-check payments are accepted without a fee. However, a service fee does apply for online credit card payments. See Payment Information for details.

Pay By Check

Please make checks payable to:
WASHOE COUNTY TREASURER

Mailing Address:
P.O. Box 30039
Reno, NV 89520-3039

Overnight Address:
1001 E. Ninth St., Ste D140
Reno, NV 89512-2845

Payment Information

Special Assessment District

Installment Date Information

Assessment Information

The Washoe County Treasurer's Office makes every effort to produce and publish the most current and accurate information possible. No warranties, expressed or implied, are provided for the data herein, its use, or its interpretation. If you have any questions, please contact us at (775) 328-2510 or tax@washoecounty.us

This site is best viewed using Google Chrome, Internet Explorer 11, Mozilla Firefox or Safari.

WSUP19-0003
EXHIBIT E

COMMNET WIRELESS PROJECT SUPPORT STATEMENT

Project Name: Vya, NV
Project Address: 89000A Dugway Road, Vya, NV 89413
Project APN: 061-010-49

Introduction

Commnet Wireless (Commnet) focuses on connecting rural America with affordable, carrier grade communications networks to improve safety and quality of life, and to promote economic development. The areas of focus are predominately small communities, state and national parks, seasonal areas, and the roadways that connect these areas to mainstream America. Commnet is seeking to improve cellular coverage within Vya, NV, as well as Hwy 34 north of Vya for approximately 12 miles. In addition, this site is needed to cover Hwy 8, west of the intersection of Hwy 8A/34, for approximately 7 miles, and Hwy 34 south of Vya for approximately 14 miles. Furthermore, this site will be utilized for the FirstNet nationwide emergency broadband network dedicated to first responders.

Location

Commnet proposes the construction of a new wireless communications facility that consists of a 150' monopole located at Dugway Road in Vya, Nevada. The property is zoned General Rural (GR) and is owned by the United States of America and is managed by the Bureau of Land Management. The adjacent parcels are also owned by the United States of America as well as private landowners. The nearest residentially zoned property of medium density suburban residential development, is located mainly on the outskirts of the town of Gerlach, Nevada, which is approximately 70 miles away from the proposed facility.

Project Description/Design

Commnet will be adding (6) antennas, (6) RRU's, (1) surge suppressor, (1) Fiber, (2) DC power lines, (2) microwave dishes along with (4) ½" coax lines on the tower. An outdoor shelter along with a generator and propane tank will be situated within a fenced 77' x 97'compound. This will be an unmanned facility providing cellular and First Net responders coverage 24 hours a day, 7 days a week.

Public and Safety Benefits of Improved Wireless Service

Today, more people are relying on wireless phones as their main form of communication; whether it be in their homes, businesses, and/or vehicles. This site will allow Commnet's customers to maintain cellular coverage as shown in the coverage map referenced below. Additionally, this site is also being utilized for the FirstNet nationwide emergency broadband network dedicated to first responders (ie Fire, Police, EMT) for the ability to communicate on a single network for any public safety needs in this area.

Existing Coverage

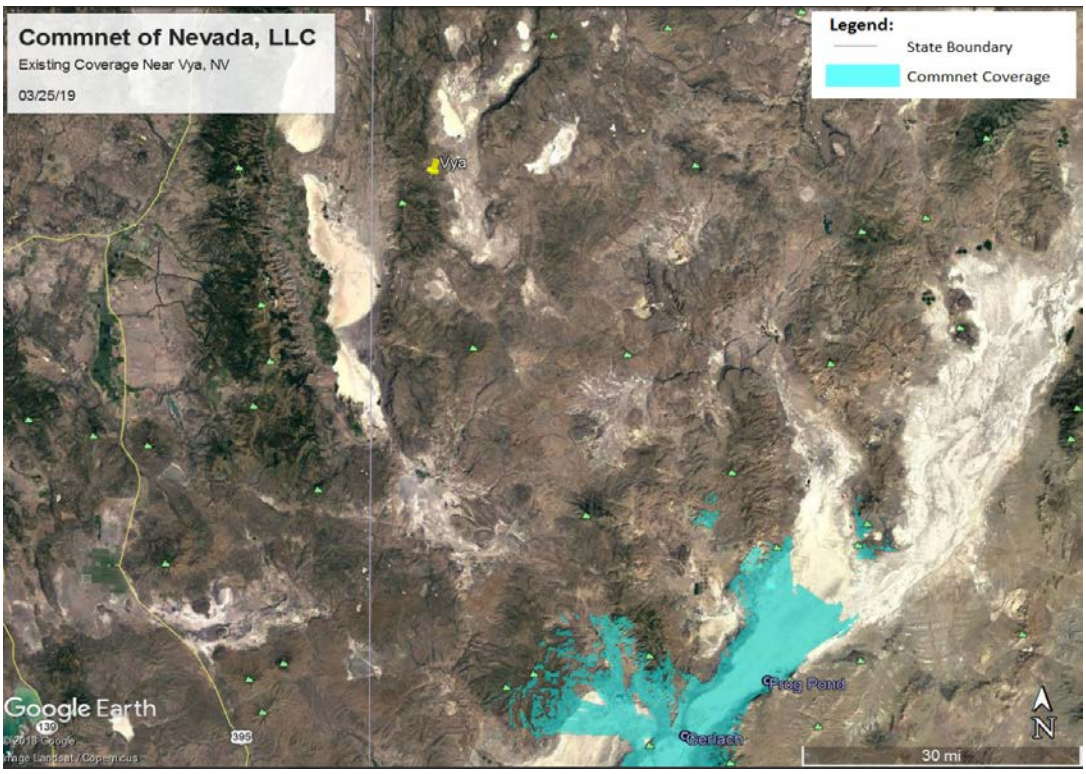

Coverage with Proposed Tower

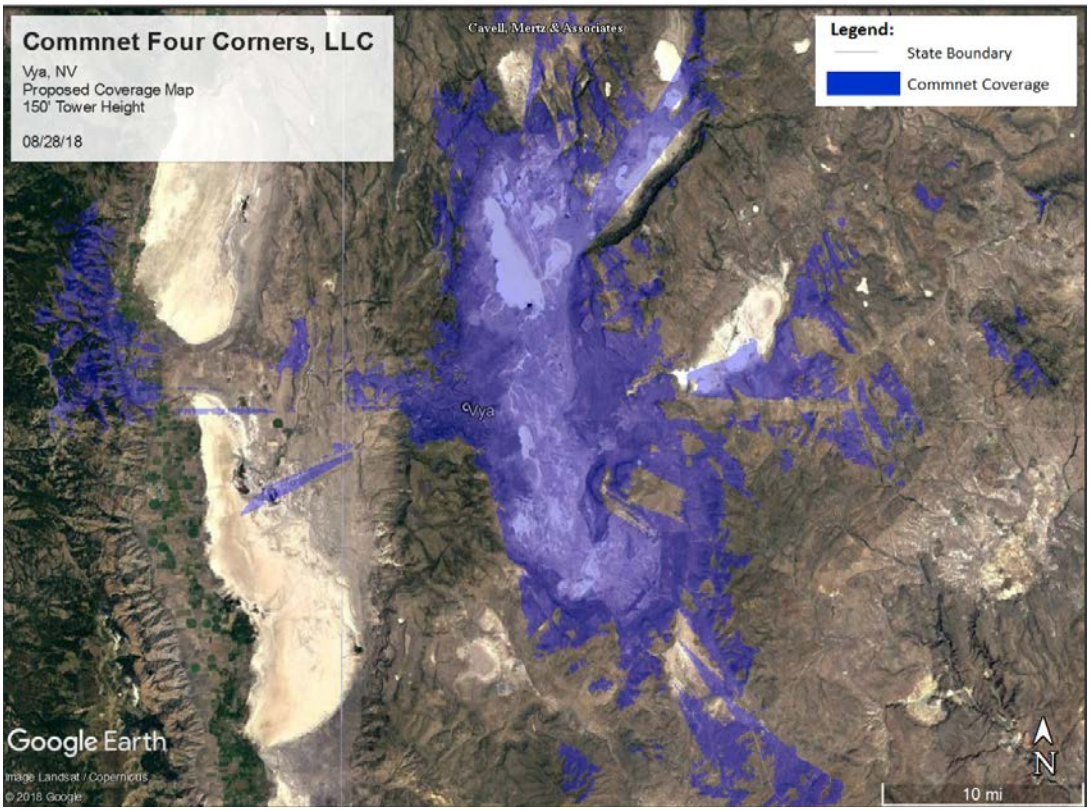

Aesthetic Impacts

Commnet proposes to install a 150' monopole. The proposed height was required due to the surrounding topography and meets the County's requirements for facilities in this zoning code. The facility will not have any negative impacts on this project or adjacent properties in the community as there is currently minimal visibility of the existing facilities from public roadways.

Alternative Site Analysis

When searching for any new communication site location, Commnet's first goal is to try and secure space on an existing tower or tall structure at the height required. With this philosophy in mind, Commnet first evaluated the collocation opportunities in the search area that offered the height, ground space, access and utilities and other needs required for their system. Commnet's initial location was located at Fortynine Mountain. It was determined there were three (3) individual tower sites. The possibility of using any of the existing towers was ruled out due to an unwilling property owner.

In order to meet the required coverage objective, Commnet concluded that the construction of a new facility would be required. Commnet and the BLM worked together to layout an approved location for the proposed facility.

Below is a detailed explanation of why each existing facility at Fortynine Mountain would not be a viable collocation candidate.

1. Bureau of Land Management Tower (Option #1)– Site is located on BLM lands. The BLM stated that they cannot permit any new users at this location as access easements cross private lands and the property owner will not allow additional users. Commnet left multiple messages for the property owner without receiving any responses.

2. Bureau of Land Management Tower (Option #2)– Site is located on BLM lands . The BLM stated that they cannot permit any new users at this location as access easements cross private lands and the property owner will not allow additional users. Commnet left multiple messages for the property owner without receiving any responses.

3. Los Angeles Department of Water and Power (Option #3) – This site is located near the BLM tower (option #2); however, it is placed on the unwilling property owner's parcel. Per the BLM, the property owner will not allow new users access on his property. Aside from the unwilling property owner, Commnet has tried to collocate on other LADWP towers, with no response.

Statement of Commitment to Allow Collocation

In addition to Commnet's antenna loadings as proposed, this tower is also structurally designed to accommodate additional communication collocators.

Lighting and Signage

Unless required by the Federal Aviation Administration (FAA), no lighting is proposed at this facility. All required FCC and other regulatory notification signage will be attached to the shelter door and/or fence.

Access/Utilities/Parking

Access to the facility is by way of Dugway Road which is located off of County Road 8A, approximately 70+ miles northwest of Gerlach. No road improvements are planned as Commnet will utilize the existing dirt road. Power for the facility will be routed underground in a conduit from a nearby transformer to a new meter bank located within the fenced the facility as depicted in the site plan. Batteries and generator/propane tank will serve as back-up power supply. Parking is not proposed as this is an unmanned facility that will be visited by a cell tech once or twice a month. There is sufficient parking at the facility location.

Maintenance and equipment back-up power.

The proposed wireless communications facility is located in a remote rural location. Because First Net responder emergency equipment will be located at this facility, it is imperative that the facility is operable in the event of a power outage or a natural disaster. In the event of an outage, the battery power will operate the system. If the power outage is for an extended period, and the batteries are no longer effective, the generator will automatically power the site. This multi-layer back-up system is important for communications sites to ensure continued operation. A cell technician will visit the site approximately once or twice a month to perform regular equipment maintenance.

Landscaping Variance

Commnet is not proposing landscaping at this facility and is seeking a variance to obtain relief from the landscaping requirements. The subject property is located in a remote rural location, has restricted access to water resources, and will have limited monthly technician visits. The site is located approximately 2,000 feet from the nearest public roadway and landscaping would not be visible to the general public. There is natural landscaping surrounding the proposed facility that shields the site to public visibility. Commnet is requesting the Board of Adjustments to specifically waive landscaping requirements for the above stated reasons.

Grading

Not applicable. Grading is not anticipated for this project.

Significant Hydrological Resources

The subject site is located in the High Desert planning area. Per section Section 110.418.05 (e), the provisions of this article do not apply for development in the High Desert planning area.

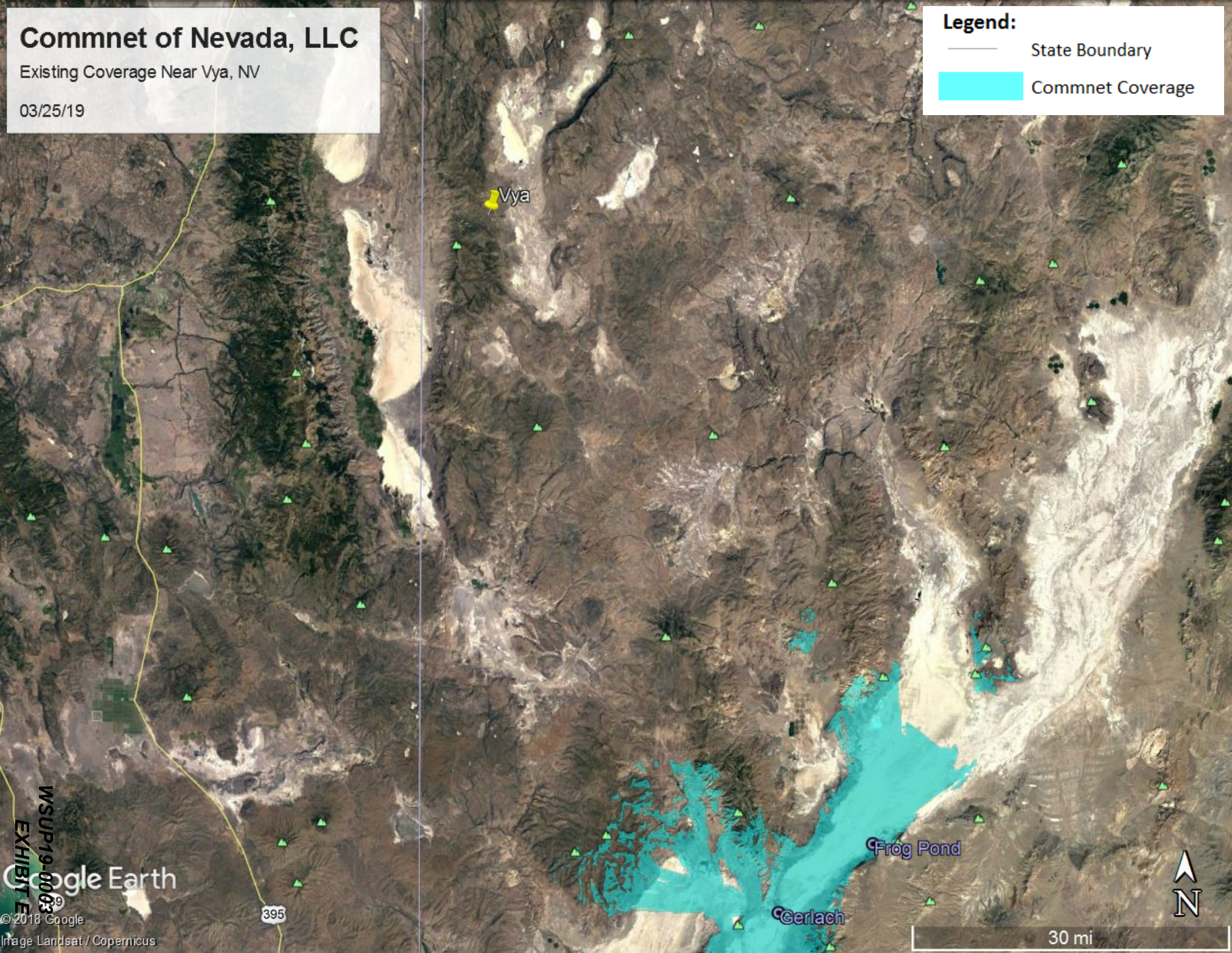

WSUP19-0003
EXHIBIT E

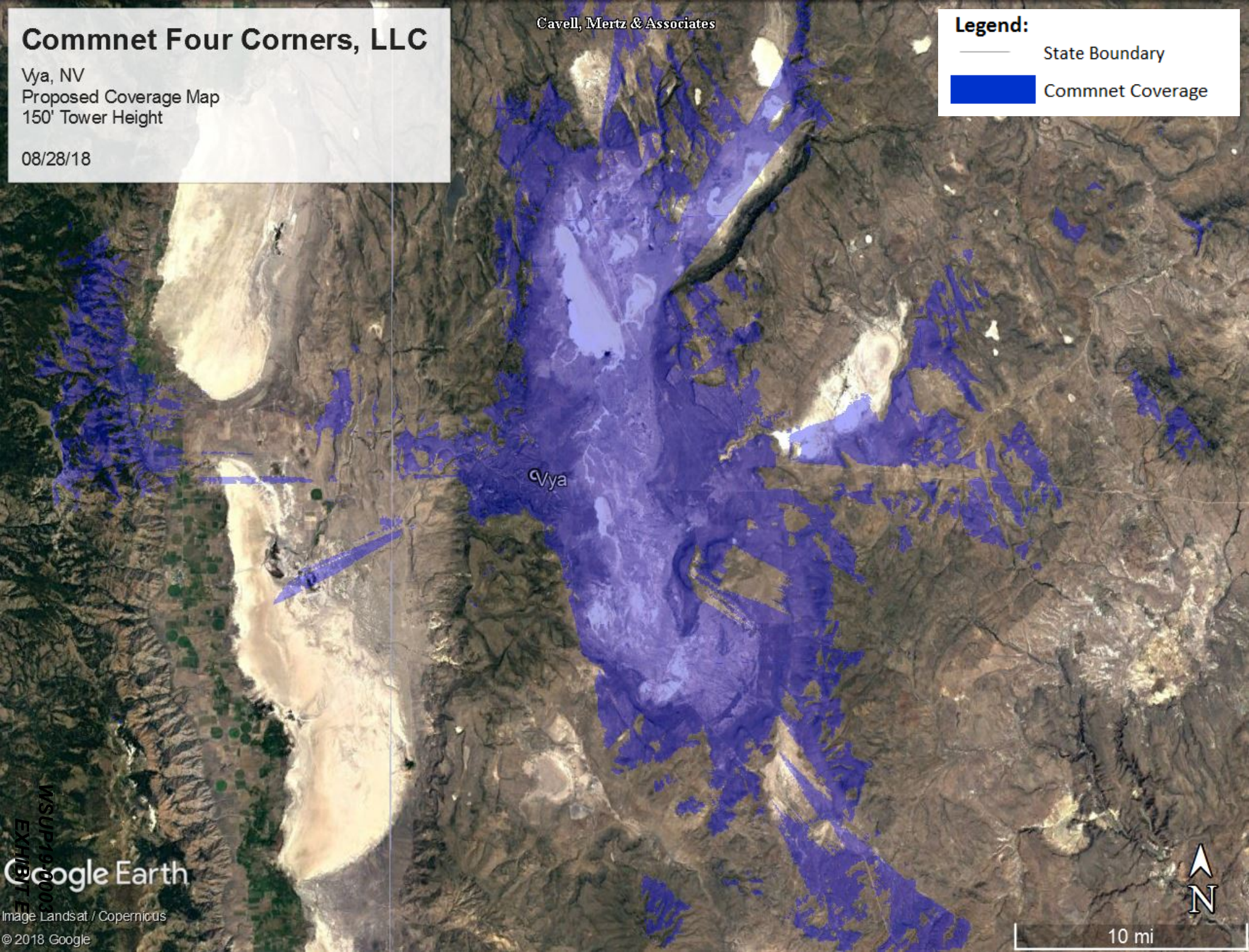

WSUP19-0003
EXHIBIT E

PROJECT INFORMATION

RAW LAND MONOPOLE

VYA, NEVADA

89000A DUGWAY RD
GERLACH, NV 89413

PROJECT OWNER

Commnet
Connecting Rural America

ENGINEER

ABN ENGINEERING

LOCATION MAP

WSUP19-0003
EXHIBIT E

PROJECT INFORMATION

RAW LAND MONOPOLE

VYA, NEVADA

89000A DUGWAY RD
GERLACH, NV 89413

PROJECT OWNER

Commnet
Connecting Rural America

ENGINEER

ABN ENGINEERING

Looking North Toward Proposed
Monopole Location (Before)

WSUP19-0003
EXHIBIT E

PROJECT INFORMATION

RAW LAND MONOPOLE

VYA, NEVADA

89000A DUGWAY RD
GERLACH, NV 89413

PROJECT OWNER

Commnet
Connecting Rural America

ENGINEER

ABN ENGINEERING

Looking North Toward Proposed
Monopole Location (After)

WSUP19-0003
EXHIBIT E

PROJECT INFORMATION

RAW LAND MONOPOLE

VYA, NEVADA

89000A DUGWAY RD
GERLACH, NV 89413

PROJECT OWNER

Commnet
Connecting Rural America

ENGINEER

ABN ENGINEERING

LOCATION MAP

WSUP19-0003
EXHIBIT E

PROJECT INFORMATION

RAW LAND MONOPOLE

VYA, NEVADA

89000A DUGWAY RD
GERLACH, NV 89413

PROJECT OWNER

Commnet
Connecting Rural America

ENGINEER

ABN ENGINEERING

Looking North East Toward
Monopole Location (Before)

WSUP19-0003
EXHIBIT E

PROJECT INFORMATION

RAW LAND MONOPOLE

VYA, NEVADA

89000A DUGWAY RD
GERLACH, NV 89413

PROJECT OWNER

Commnet
Connecting Rural America

ENGINEER

ABN ENGINEERING

Looking North East Toward
Monopole Location (After)

WSUP19-0003
EXHIBIT E

PROJECT INFORMATION

RAW LAND MONOPOLE

VYA, NEVADA

89000A DUGWAY RD
GERLACH, NV 89413

PROJECT OWNER

Commnet
Connecting Rural America

ENGINEER

ABN ENGINEERING

LOCATION MAP

WSUP19-0003
EXHIBIT E

PROJECT INFORMATION

RAW LAND MONOPOLE

VYA, NEVADA

89000A DUGWAY RD
GERLACH, NV 89413

PROJECT OWNER

Commnet
Connecting Rural America

ENGINEER

ABN ENGINEERING

Looking East Toward Proposed
Monopole Location (Before)

WSUP19-0003
EXHIBIT E

PROJECT INFORMATION

RAW LAND MONOPOLE

VYA, NEVADA

89000A DUGWAY RD
GERLACH, NV 89413

PROJECT OWNER

Commnet
Connecting Rural America

ENGINEER

ABN ENGINEERING

Looking East Toward Proposed
Monopole Location (After)

WSUP19-0003
EXHIBIT E

Vya, NV Photos

*Note that all photos may have not been attained due to exceptional conditions prohibiting travel to the site

Vya Pre CX East looking West

Vya Pre CX Tower Center looking West

Vya Pre CX Tower Center looking North

Vya Pre CX West looking East

Community Services Department

Planning and Building

DIRECTOR'S MODIFICATION OF PARKING/LANDSCAPING MINOR DEVIATION STANDARDS APPLICATION

Community Services Department
Planning and Building
1001 E. Ninth St., Bldg. A
Reno, NV 89512-2845

Telephone: 775.328.6100

WSUP19-0003
EXHIBIT E

Washoe County Development Application

Your entire application is a public record. If you have a concern about releasing personal information, please contact Planning and Building staff at 775.328.6100.

Project Information	**Staff Assigned Case No.:** _____
Project Name: Commnet Wireless, Vya, NV	
Project Description: Commnet Wireless proposed the construction of a new unmanned wireless communication facility serving the Vya and surrounding area.	
Project Address: Washoe County 911 Assigned address: 89000A Dugway Road, Gerlach, NV 89413	
Project Area (acres or square feet): 7,469 sf lease area along with access and utility easements	
Project Location (with point of reference to major cross streets **AND** area locator): From Vya, NV, head north on CR 34 N (1.4 miles) continue straight onto Dugway Road (1.5) miles. Turn left onto unmanned dirt road to site.	

Assessor's Parcel No.(s):	Parcel Acreage:	Assessor's Parcel No.(s):	Parcel Acreage:
061-010-49	773.890015 acres		

Indicate any previous Washoe County approvals associated with this application:
Case No.(s). NA

Applicant Information (attach additional sheets if necessary)

Property Owner:		**Professional Consultant:**	
Name: United States of America - BLM		Name: CIS Communications, LLC	
Address: 2550 Riverside Drive		Address: 749 Old Ballas Road	
Susanville, CA	Zip: 96130	Creve Coeur, MO	Zip: 63141
Phone: (530) 252-5321	Fax:	Phone: (314) 569-2275	Fax:
Email: dryan@blm.gov		Email: julie@ciscomm.com	
Cell: (530) 252-5321	Other:	Cell: (314) 640-5182	Other:
Contact Person: Daniel Ryan - Realty Specialist		Contact Person: Julie Krekeler - General Manager	
Applicant/Developer:		**Other Persons to be Contacted:**	
Name: Commnet of Nevada, LLC (dba Commnet Wireless)		Name:	
Address: 1562 North Park Street		Address:	
Castle Rock, CO	Zip: 80109		Zip:
Phone: (720) 733-7854	Fax:	Phone:	Fax:
Email: cphillips@atni.com		Email:	
Cell: (720) 733-7854	Other:	Cell:	Other:
Contact Person: Cindy Phillips - Director of Real Estate/Regulatory		Contact Person:	

For Office Use Only

Date Received:	Initial:	Planning Area:	
County Commission District:		Master Plan Designation(s):	
CAB(s):		Regulatory Zoning(s):	

Director's Modification of Standards
Supplemental Information

(All required information may be separately attached)

1. What modification or deviation are you requesting? **Be specific.**

Parking Standards - Article 110.410.00 Landscaping Standards - Article 110.412.00 Noise and Lighting - Article 110.414.00 Minor deviation Standards - Section 110.804.35

2. Why is the modification or deviation necessary to the success of the project/development? **Be specific.** Are there any extenuating circumstances or physical conditions on the proposed project/development site?

Please refer to the attached Director's Memorandum for explanation

3. Are you proposing to mitigate the effect of the modification or reduction?

Please refer to the attached Director's Memorandum for explanation

4. What section of code are you requesting to modify or deviate? **Be specific.** List the code section and if there are specific requirements for the modification, provide detailed information. For deviation, provide the percentage of the deviation.

Parking Standards - Whole Section Landscaping Standards - Whole Section Noise and Lighting - Whole Section Minor Deviation Standards - Maximum height allowed (150' monopole) as stated per Washoe County Planning Department

5. For Minor Deviation request; list what properties/parcels are affected by the deviation? Explain if there will be any impacts to the affected neighboring properties. (At a minimum, affected property owners are those owners of parcels that immediately abut the location of the proposed minor deviation.)

Please refer to the Director's Memorandum for list of adjoining parcels and impact explanation.

MEMORANDUM

To: Washoe County

CC: Commnet of Nevada, LLC (Commnet Wireless)

From: Julie Krekeler, Site Acquisition, CIS Communications, LLC

Date: April 10, 2019

Re: DIRECTORS MODIFICATION REQUEST CLARIFICATION – Special Use Permit - APN: 061-010-49 (Vya, NV)

Dear Washoe County,

The subject application is for a Special Use Permit for the construction of a telecommunications facility consisting of a 150' monopole, outdoor shelter, and a generator and propane tank within a 77' x 97' fenced compound situated in rural Vya, Nevada. The parcel is located on property owned by the United Stated of America and is managed by the Bureau of Land Management. The parcel consists of 773.89 acres.

Upon review of Washoe County's Development Code Section 110, Commnet Wireless is hereby requesting certain specific conditions to be considered for Director's Modification due to the following.

Article 110.410.00 Parking –Commnet Wireless would like to modify Section 110.410.00 to allow for the request to waive parking. Due to the unusual nature of the establishment and the remote rural location of this proposed unmanned facility that will be visited by a cell tech once or twice a month, the standards set form in this section such as parking design and access width would be excessive and unreasonable for Commnet Wireless. The secured proposed facility is not for the general public access and there is ample space for the technician to park either outside or inside of the fenced lease area.

Article 110.412.00 Landscaping - Commnet Wireless would like to modify Section 110.412.00 to allow for the request to waive the whole section of landscaping. The subject site is located in a remote unimproved area. In addition to being remote, the site is located 2000+ feet from the nearest gravel county road or adjoining parcel where there will be minimal visibility. Because this remote location and it is an unmanned facility, Commnet Wireless' policy is to avoid any landscaping to conserve water as well as the need for routine landscape maintenance. Additionally, because of the vast size of the parcel (773 acres), it is unreasonable for Commnet Wireless to meet Washoe County's requirement of landscape coverage of a minimum twenty (20) percent of the total developed land area as well as landscaped buffers at least one (1) tree every twenty (20) linear feet of property frontage as outlined in Sections 110.412.40 (a) and (c).

Section 110.414.00 Noise and Lighting - Commnet Wireless would like to modify the Section 110.414.00 to allow for the request to waive the entire section of Noise and Lighting. The site will be powered from a nearby transformer to a new meter bank located within the fenced compound. There will be a generator installed at the site in the event of extended power outages. First Net responder equipment is proposed at this site. Per Section 110.414.20 (b) emergency equipment is exempt from this section.

Unless lighting is required by the FAA, no lighting is proposed at the unmanned facility. Commnet proposes Washoe County's current best practice of "dark-sky" standards. There will be lighting inside the shelter that is turned on only during a technician's site visit.

Section 110.804.35 Minor Deviations – Commnet Wireless is proposing a 150' monople and is seeking approval for the height deviation per table 110.324.55.1 . As stated, this site is located in a remote area of northern Nevada where there is currently limited to no cellular service. This site will include First Net responder emergency equipment as well as multi users and due to the diverse topography and the remoteness of the area, the height is needed to overcome that terrain to obtain optimal coverage.

The following is a list of parcels that abut the subject property parcel. The closets parcels to the proposed facility, as indicated by an asterisk, are at a distance of 2,000 feet. The nearest residence is approximately one (1) mile away and this facility will not impose any negative impacts. The impact this proposed facility will have is a communication source that is vital to today's safety and quality of life.

061-010-02 – Zoned GR
*061-010-03 – Zoned GR
*061-010-04 – Zoned GR
061-010-05 – Zoned GR
061-010-07 – Zoned GR
* 061-010-55 – Zoned GR
061-260-08 – Zoned GR
061-260-09 – Zoned GR
061-260-03 – Zoned GR
061-260-02– Zoned GR
061-260-01– Zoned GR
061-050-46 – Zoned GR
061-050-30– Zoned GR

LEGAL DESCRIPTIONS

BEING A PORTION OF SECTION 5, TOWNSHIP 42 NORTH, RANGE 19 EAST, MDB&M., WASHOE COUNTY, NEVADA, DESCRIBED AS FOLLOWS:

"PARCEL A" (LEASE AREA)

COMMENCING AT THE SOUTHWEST CORNER OF THE NORTHWEST QUARTER (NW1/4) OF SECTION 5, TOWNSHIP 42 NORTH, RANGE 19 EAST, M.D.B.&M.;

THENCE NORTH 77°40'28" EAST, 2441.54 FEET TO THE POINT OF BEGINNING;

THENCE SOUTH 89°49'37" EAST, 72.00 FEET TO A POINT HEREINAFTER REFERRED TO AS POINT "A";

THENCE CONTINUING, SOUTH 89°49'37" EAST, 5.00 FEET;

THENCE NORTH 00°10'23" EAST, 97.00 FEET;

THENCE NORTH 89°49'37" WEST, 38.50 FEET TO A POINT HEREINAFTER REFERRED TO AS POINT "B";

THENCE CONTINUING, NORTH 89°49'37" WEST, 38.50 FEET;

SOUTH 00°10'23" WEST, 97.00 FEET TO THE POINT OF BEGINNING.

CONTAINING 7,469 SQ.FT. MORE OR LESS.

"PARCEL B" (UTILITY EASEMENT)

BEING A STRIP OF LAND 10.00 FEET IN WIDTH, LYING 5.00 FEET ON EACH SIDE OF THE FOLLOWING DESCRIBED CENTERLINE:

BEGINNING AT THE AFOREMENTIONED POINT "A";

THENCE SOUTH 12°50'26" EAST, 54.25 FEET TO THE POINT OF TERMINATION.

THE SIDELINES OF THIS STRIP OF LAND ARE TO BE LENGTHENED OR SHORTENED TO INTERSECT AT ALL ANGLE POINTS, AND TO BEGIN ON THE SOUTH LINE OF "PARCEL A".

CONTAINING 542 SQ.FT. MORE OR LESS.

"PARCEL C" (ACCESS EASEMENT)

BEING A STRIP OF LAND 12.00 FEET IN WIDTH, LYING 6.00 FEET ON EACH SIDE OF THE FOLLOWING DESCRIBED CENTERLINE:

BEGINNING AT THE AFOREMENTIONED POINT "B";

THENCE NORTH 00°00'00" EAST, 30.57 FEET;

THENCE NORTH 14°37'01" WEST, 54.43 FEET;

THENCE NORTH 25°42'37" WEST, 39.11 FEET;

THENCE NORTH 22°04'32" WEST, 32.34 FEET;

THENCE NORTH 13°24'41" WEST, 44.10 FEET;

THENCE NORTH 14°43'36" WEST, 57.25 FEET;

THENCE NORTH 24°09'51" WEST, 97.94 FEET;

THENCE NORTH 18°44'16" WEST, 85.71 FEET;

THENCE NORTH 39°03'24" WEST, 40.30 FEET TO THE POINT OF TERMINATION.

THE SIDELINES OF THIS STRIP OF LAND ARE TO BE LENGTHENED OR SHORTENED TO INTERSECT AT ALL ANGLE POINTS, AND TO BEGIN ON THE NORTH LINE OF "PARCEL A".

CONTAINING 5,781 SQ.FT. MORE OR LESS.

PARENT PARCEL LEGAL DESCRIPTION

LYING WITHIN SECTION 5, TOWNSHIP 42 NORTH, RANGE 19 EAST, M.D.M., WASHOE COUNTY, NEVADA.

OWNERSHIP INFORMATION

OWNER = UNITED STATES OF AMERICA
CONTACT = N/A

ASSESSOR'S PARCEL NUMBER = 061-010-49
VESTING DOCUMENT = N/A

TITLE REPORT DATA AND EXCEPTIONS

NO TITLE REPORT PROVIDED.

BASIS OF BEARINGS

GRID NORTH BASED UPON THE NORTH AMERICAN DATUM OF 1983/94 (2011), NEVADA WEST ZONE (2703) COORDINATES PROVIDED BY OPUS SOLUTION; THE DISTANCES ARE BASED ON A GROUND SCALE FACTOR OF 1.0002506172 REFERENCED FROM A POINT NEAR THE PROJECT WITH A LATITUDE OF 41°35'30.19834" N AND A LONGITUDE OF 119°52'47.01529" W AND A NORTH AMERICAN VERTICAL DATUM OF 1988 HEIGHT OF 6167.50 FEET USING GEOID12A

PROPOSED TOWER COORDINATES

NAD 83 LATITUDE = 41°35'30.76358" N
LONGITUDE = 119°52'47.14752" W

SITE GROUND ELEVATION = 6236.20'

STATE PLANE COORDINATES NAD 83, NEVADA WEST ZONE

METERS (GROUND) = NORTHING = 4760184.649
EASTING = 691916.598

FEET (GROUND) = NORTHING = 15617372.47
EASTING = 2270063.04

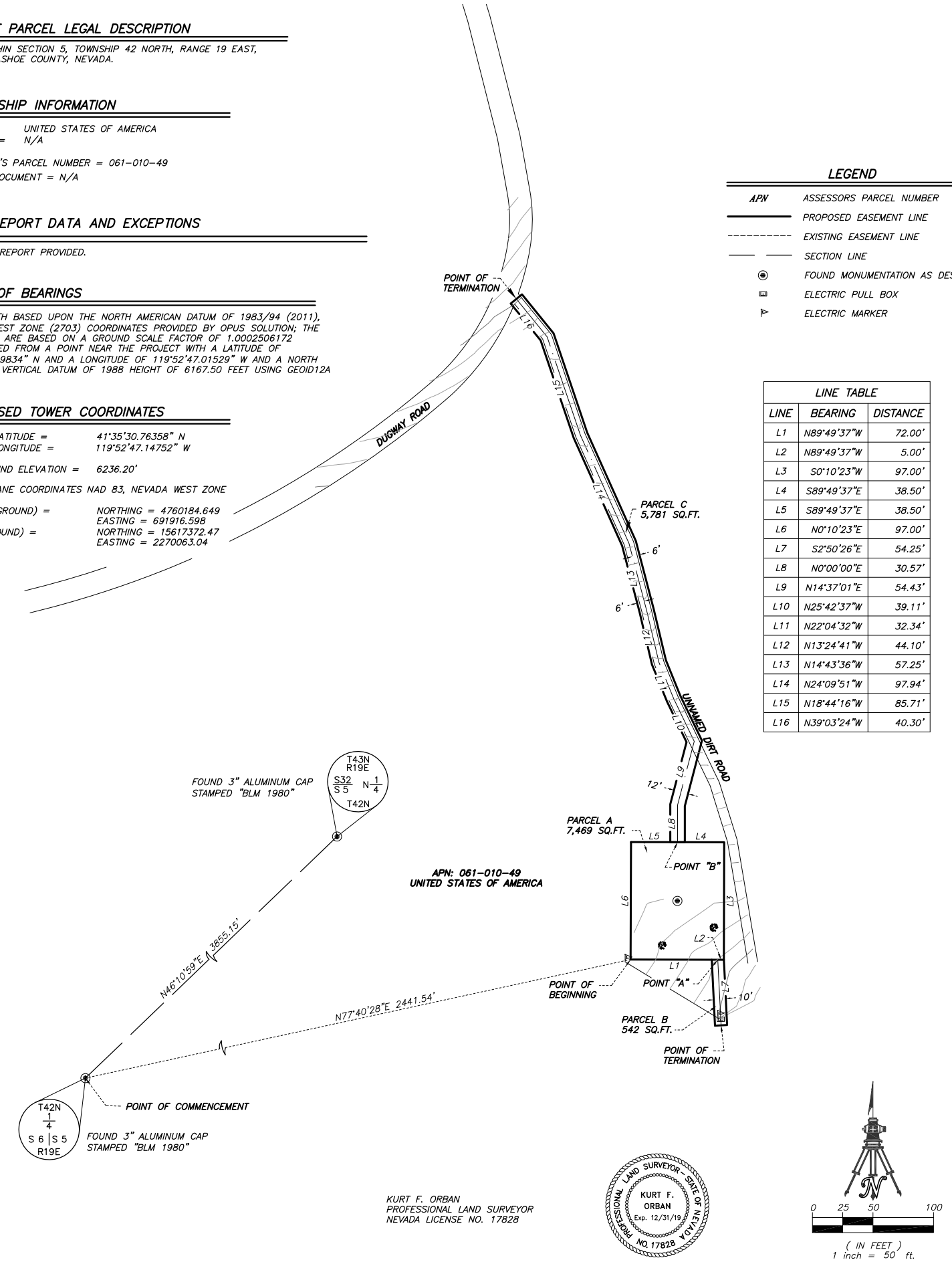

LEGEND

APN	ASSESSORS PARCEL NUMBER
———	PROPOSED EASEMENT LINE
- - - - -	EXISTING EASEMENT LINE
—— ——	SECTION LINE
◉	FOUND MONUMENTATION AS DESCRIBED
	ELECTRIC PULL BOX
	ELECTRIC MARKER

LINE TABLE

LINE	BEARING	DISTANCE
L1	N89°49'37"W	72.00'
L2	N89°49'37"W	5.00'
L3	S0°10'23"W	97.00'
L4	S89°49'37"E	38.50'
L5	S89°49'37"E	38.50'
L6	N0°10'23"E	97.00'
L7	S2°50'26"E	54.25'
L8	N0°00'00"E	30.57'
L9	N14°37'01"E	54.43'
L10	N25°42'37"W	39.11'
L11	N22°04'32"W	32.34'
L12	N13°24'41"W	44.10'
L13	N14°43'36"W	57.25'
L14	N24°09'51"W	97.94'
L15	N18°44'16"W	85.71'
L16	N39°03'24"W	40.30'

KURT F. ORBAN
PROFESSIONAL LAND SURVEYOR
NEVADA LICENSE NO. 17828

PROFESSIONAL LAND SURVEYOR - STATE OF NEVADA
KURT F. ORBAN
Exp. 12/31/19
NO. 17828

0 25 50 100
(IN FEET)
1 inch = 50 ft.

WALLACE MORRIS ORBAN SURVEYING, LLC.
LAND SURVEY CONSULTING
1250 LAMOILLE HIGHWAY, UNIT 628
ELKO, NEVADA 89801
PH:775.753.3610 FX: 775-753-7078

REV: DATE: DESCRIPTION:

COMMNET WIRELESS, LLC
VYA SITE, WASHOE COUNTY, NEVADA
061-010-49
TOPOGRAPHY MAP

DATE:	03/29/18
DRAFTER:	KFO
FIELD:	BH/CH
CHECKED:	KFO
JOB NO.	ECOM-18020

SHEET 1 OF 1 SHEETS

WSUP19-0003
EXHIBIT E

Copyright ©Abn Engineering (AbnE), 2018. This document is a proprietary item of Abn Engineering and contains information solely for use on a specific project. It cannot be used, disclosed or reproduced in any format without AbnE's prior written permission. Only our customer has the right to use the information contained in this document for construction purpose of this project up to 12 months from seal & stamped date on this document. The user agrees to indemnify defend , & hold harmless AbnE from all claims, suits, liability, demands, judgments, or expenses arising from or related to the use or re-use of the electronic files. All rights reserved.

WSUP19-0003
EXHIBIT E

GENERAL NOTES

THE ARCHITECTS/ENGINEERS HAVE MADE EVERY EFFORT AS SET FORTH IN THE CONSTRUCTION DRAWINGS, CONTRACT DOCUMENTS AND THE COMPLETE SCOPE OF WORK. CONTRACTORS BIDDING THE JOB ARE NEVERTHELESS CAUTIONED THAT MINOR OMISSIONS OR ERRORS IN THE DRAWINGS AND SPECIFICATIONS SHALL NOT EXCUSE SAID CONTRACTOR FROM COMPLETING THE PROJECT AND IMPROVEMENTS IN ACCORDANCE WITH THE INTENT OF THESE DOCUMENTS. THE BIDDER SHALL BEAR THE RESPONSIBILITY OF NOTIFYING (IN WRITING) THE ARCHITECT/ENGINEER OF ANY CONFLICTS, ERRORS OR OMISSIONS PRIOR TO THE SUBMISSION OF THE CONTRACTOR'S PROPOSAL. IN THE EVENT OF DISCREPANCIES THE CONTRACTOR SHALL PRICE THE MORE COSTLY OR EXTENSIVE WORK UNLESS OTHERWISE DIRECTED.

CODE COMPLIANCE

ALL WORK AND MATERIALS SHALL BE PERFORMED AND INSTALLED IN ACCORDANCE WITH THE CURRENT EDITIONS OF THE FOLLOWING CODES AS ADOPTED BY THE LOCAL GOVERNING AUTHORITIES. NOTHING IN THESE PLANS IS TO BE CONSTRUED TO PERMIT WORK NOT CONFORMING TO THESE CODES.

2012 INTERNATIONAL BUILDING CODE (IBC)
2012 INTERNATIONAL MECHANICAL CODE (IMC)
2012 INTERNATIONAL PLUMBING CODE (IPC)
2011 NATIONAL ELECTRICAL CODE (NEC)
TIA/EIA-222-F STRUCTURAL STANDARDS FOR STEEL ANTENNA TOWERS AND ANTENNNA SUPPORTING STRUCTURES
LOCAL BUILDING CODE(S)
CITY AND/OR COUNTY AMENDED

JURISDICTION: WASHOE COUNTY

SITE NAME:

VYA, NEVADA

PROJECT:

RAW LAND MONOPOLE

Commnet
Connecting Rural America

STATE MAP

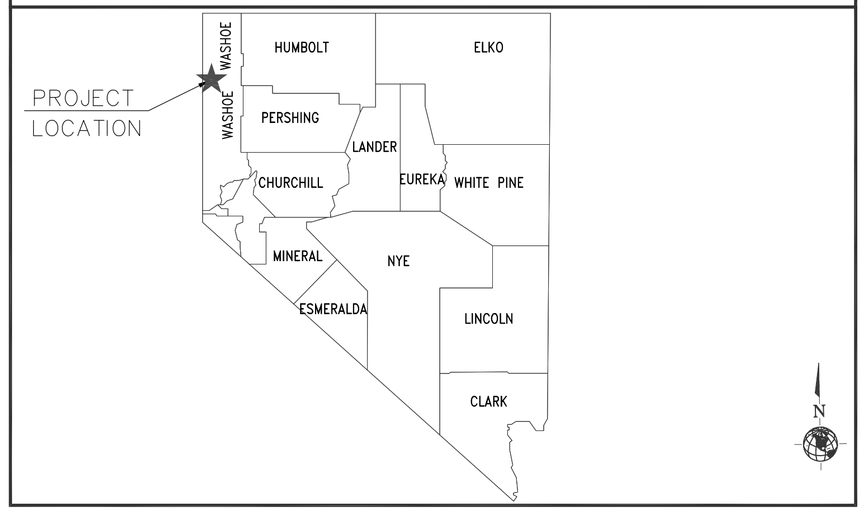

VICINITY MAP

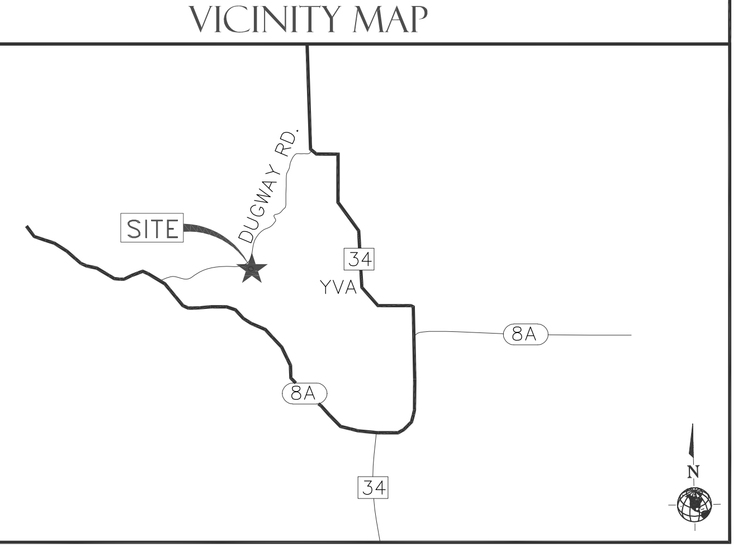

PROJECT TEAM

PROJECT OWNER:	COMMNET WIRELESS, LLC 1562 NORTH PARK STREET CASTLE ROCK, COLORADO 80109
PROJECT MANAGER:	1562 NORTH PARK STREET CASTLE ROCK, COLORADO 80109 CONTACT: POLLEY WIESE PHONE: (720) 733-5399 EMAIL: pwiese@atni.com
CONSTRUCTION MANAGER:	1562 N. PARK STREET CASTLE ROCK, CO 80104 CONTACT: DAVE TILLER, CM PHONE: (720) 357-5384 EMAIL: DTiller@atni.com
LEASE ACQUISITION:	1562 NORTH PARK STREET CASTLE ROCK, COLORADO 80109 CONTACT: ALEXIS LEIDIGH, CASTLE ROCK CO. PHONE: (501) 448-1545
CIVIL ENGINEER:	Abn ENGINEERING, LLC 1337 E. DESERT FLOWER LANE PHOENIX, AZ 85048 CONTACT: SANDEEP A. MANE, P.E. PHONE: (480) 213-8524 EMAIL: smane@abneng.com
ELECTRICAL ENGINEERING:	EE LLC 12005 ANTELOPE TRAIL PARKER, CO 80138 PHONE: (303) 748-1189
SURVEYOR:	WALLACE MORRIS ORBAN SURVEYING, LLC 1250 LAMOILLE HIGHWAY, UNIT 628 ELKO, NV 89801 PHONE: (775) 753-3610
POWER PROVIDER:	SURPRISE VALLEY ELECTRIFICATION CORP 516 US HWY 395 ALTURAS, CA 96101 PHONE: (530) 233-3511 CONTACT: DJ NORTHRUP - COMPLIANCE TECH EMAIL: DJNSVEC@FRONTIER.COM

PROJECT INFORMATION

SITE NAME:	VYA, NEVADA
SITE ADDRESS:	89000A DUGWAY ROAD GERLACH, NV 89413
SITE COORDINATES:	LATITUDE: 41° 35' 30.76358"N (NAD 83) LONGITUDE: 119° 52' 47.14752"W (NAD 83) ELEVATION: ±6,236.20' (AMSL) (NAVD 88)
APPLICANT:	COMMNET WIRELESS, LLC 1562 NORTH PARK STREET CASTLE ROCK, COLORADO 80109
CONTACT:	DAVE TILLER (720) 357-5384
PROPERTY OWNER:	UNITED STATES OF AMERICA
APN NUMBER:	061-010-49
CURRENT ZONING:	BLM
CONSTRUCTION TYPE:	VB
NEW USE:	U
OCCUPANCY:	VACANT LAND
CURRENT USE:	UNMANNED TELECOMMUNICATIONS FACILITY
LEASE AREA:	7,469 SQ.FT.

SHEET INDEX

TITLE:	DESCRIPTION:
T-1	TITLE SHEET & PROJECT INFORMATION
GN-1	GENERAL NOTES
SN-1	SITE SIGNATE DETAILS
A-1	OVERALL SITE PLAN
A-2.0	ENLARGED SITE PLAN
A-2.1	SHELTER LAYOUT
A-3	SITE ELEVATION & DETAILS
A-4	NOT USED
A-5	CONSTRUCTION DETAILS
A-6	CONSTRUCTION DETAILS
A-7	CONSTRUCTION DETAILS
A-8	CONSTRUCTION DETAILS
S-1	SHELTER FOUNDATION DETAILS
E-1	OVERALL ELECTRICAL PLAN & ELECTRICAL NOTES
E-2	PANEL SCHEDULE & ONE LINE DIAGRAM
E-3	DETAILS
G-1	GROUNDING PLAN
G-2	GROUNDING DETAILS

DRIVING DIRECTIONS

FROM VYA, NEVADA: HEAD NORTH ON COUNTY RD 34 N. (1.4 MILES) CONTINUE STRAIGHT ONTO DUGWAY RD. (1.5 MILES). TURN LEFT ONTO UNNAMED DIRT ROAD TO SITE.

PROJECT DESCRIPTION

INSTALLING A NEW MONOPOLE TO INCLUDE, NEW ANTENNAS, RRHs, MOUNTS, PRE-FABRICATED SHELTER, PROPANE TANK, GENERATOR AND A METER SERVICE WITHIN A NEW CHAIN LINK FENCE.

UTILITY TABLE

UTILITY:	PROVIDER:
WATER	N/A
SEWER	N/A
ELECTRICAL	NV ENERGY
TELEPHONE/FIBER	TBD
POLICE	WASHOE COUNTY
FIRE	WASHOE COUNTY

APPROVAL BOX

DEPARTMENT:	SIGNATURE:	DATE:
PROJECT MANAGER		
CONSTRUCTION MANAGER		
RF MANAGER		
PROPERTY OWNER REPRESENTATIVE		

Commnet
Connecting Rural America

ABN ENGINEERING
1337 E DESERT FLOWER LANE
PHOENIX, AZ 85048
PHONE: (480) 213-8524

PE SEAL

DESIGNER: JASON NGO

LEAD EE: SB

LEAD CE/SE: SAM

SUBMITTALS

REV.	DATE	DESCRIPTION	BY
H	1/25/19	COMMENTS	JN
I	2/13/19	COMMENTS	JN
J	2/18/19	COMMENTS	JN
K	2/19/19	FINAL CD	JN
L	4/3/19	REVISED CD	JN

THE INFORMATION CONTAINED IN THIS SET OF DOCUMENTS IS PROPRIETARY BY NATURE. ANY USE OR DISCLOSURE OTHER THAN THAT WHICH RELATES TO COMMNET WIRELESS IS STRICTLY PROHIBITED.

SITE NAME

VYA, NEVADA

PROJECT

RAW LAND MONOPOLE

SITE ADDRESS

LAT: 41° 35' 30.76358"N
LONG: 119° 52' 47.14752"W
89000A DUGWAY ROAD
GERLACH, NV 89413

SHEET TITLE

TITLE SHEET

SHEET NUMBER

T-1

Copyright ©Abn Engineering (AbnE), 2018. This document is a proprietary item of Abn Engineering and contains information solely for use on a specific project. It cannot be used, disclosed or reproduced in any format without AbnE's prior written permission. Only our customer has the right to use the information contained in this document for construction purpose of this project up to 12 months from seal & stamped date on this document. The user agrees to indemnify defend , & hold harmless AbnE from all claims, suits, liability, demands, judgments, or expenses arising from or related to the use or re-use of the electronic files. All rights reserved.

WSJP19-0003
EXHIBIT E

GENERAL NOTES – SCOPE OF WORK REVISION 9-19-16

THE CONTRACTOR SHALL CONDUCT ALL ACTIVITIES WHETHER CONSTRUCTION RELATED OR AFTER-HOURS WITH A HIGH DEGREE OF ETHICS AND APPROPRIATE BEHAVIOR.

THE CONTRACTOR SHALL PROVIDE A COMPLETE INSTALLATION IN ACCORDANCE WITH THE CONSTRUCTION PLANS PROVIDED AND DIRECTION OF THE CONSTRUCTION/PROJECT MANAGERS.

THE GC WILL NOT START CONSTRUCTION UNTIL EACH OF THE FOLLOWING HAS BEEN COMPLETED: PRE-CONSTRUCTION MEETING HAS BEEN HELD; BUILDING PERMIT HAS BEEN SECURED, AND THE PROJECT ENGINEER HAS AUTHORIZED START OF CONSTRUCTION.

THE CONTRACTOR SHALL NOT BE EXPECTED TO POWER-UP, COMMISSION OR BRING ON-LINE ANY EQUIPMENT.

THE CONTRACTOR SHALL ENSURE SITE AREA IS CLEAN AND FREE OF CONSTRUCTION DEBRIS ON A DAILY BASIS.

THE CONTRACTOR MAY BE REQUIRED TO ASSIST WITH PERMIT APPLICATIONS AND PLAN SUBMITTALS.

THE CONTRACTOR SHALL CALL-IN AND COORDINATES ALL NECESSARY INSPECTIONS WITH THE PROPER CITY, COUNTY, STATE AUTHORITY.

THE CONTRACTOR SHALL BE RESPONSIBLE FOR INITIATING, MAINTAINING AND SUPERVISING ALL SAFETY PRECAUTIONS AND PROGRAMS IDENTIFIED BY OHSA REGULATIONS. UPON REQUEST, THE CONTRACTOR SHALL PROVIDE DOCUMENTS SHOWING COMPLIANCE.

THE CONTRACTOR SHALL SUPPLY ALL TOOLS NECESSARY TO COMPLETE CONSTRUCTION INCLUDING INSTALLATION OF GROUNDING SYSTEM, IN ACCORDANCE WITH THE PLANS.

THE CONTRACTOR SHALL PROVIDE AS-BUILT DRAWINGS THAT DEMONSTRATE COMPLETION OF CONSTRUCTION AND THAT NOTE ANY DEVIATIONS FROM THE PLANS.

BID WALK

A BID WALK WILL BE HELD ON-SITE TO DISCUSS ANY QUESTIONS OR POSSIBLE SUGGESTIONS THAT GC'S MAY HAVE IN REGARDS TO THIS INSTALLATION. BID WALK IS OPTIONAL BUT NO CHANGE ORDERS WILL BE ALLOWED UNLESS APPROVED CM. BID WALK IS DESIGNED TO CLEAR UP ANY CONCERNS OR QUESTIONS THAT GC'S MAY HAVE ABOUT THE INSTALLATION.

DATE:
TIME:
GENERAL CONTRACTOR'S PROJECT MANAGER (CONTRACTOR PM)

BEFORE THE COMMENCEMENT OF ANY WORK, THE GC WILL ASSIGN A CONTRACTOR PROJECT MANAGER (CONTRACTOR PM) WHO WILL ACT AS A SINGLE POINT OF CONTACT FOR ALL PERSONNEL INVOLVED IN THIS PROJECT. THIS CONTRACTOR PM WILL DEVELOP A MASTER SCHEDULE FOR THE PROJECT, WHICH WILL BE SUBMITTED TO THE CWL CM PRIOR TO THE COMMENCEMENT OF ANY WORK. THIS CONTRACTOR PM WILL ALSO:

SCHEDULE AN ON-SITE MEETING PRIOR TO PROJECT START, WITH ALL MAJOR PARTIES PRESENT. APPROPRIATE PARTIES INCLUDE (BUT ARE NOT LIMITED TO) CWL CM, CWL LOCAL OPERATIONS POC (MANAGER, SUPERVISOR OR TECHNICIAN), LOCAL POWER COMPANY, DESIGNATED ELECTRICIAN, LOCAL TELEPHONE COMPANY, GC CREW CHIEF / FOREMAN.

THE CONTRACTOR PM WILL PROVIDE DAILY VERBAL UPDATES ON SITE WORK PROGRESS TO THE CWL CM.

CIVIL

THE CONTRACTOR SHALL VERIFY LOCATION OF UNDERGROUND PIPES/CONDUITS USING AN INDEPENDENT UNDERGROUND LOCATOR SERVICE.

THE CONTRACTOR SHALL COORDINATE EXCAVATION WORK WITH CM/OWNER SO AS NOT TO INTERFERE WITH COMPOUND ACCESS BY SITE OWNER AND/OR CURRENT TENANTS.

ALL EXCAVATION SHALL BE DONE WITH CARE TO AVOID DAMAGING UNDERGROUND PIPES/CONDUITS. ANY DAMAGE CAUSED BY CONSTRUCTION SHALL BE REPAIRED IMMEDIATELY AND MONITORED BY THE CONTRACTOR UNTIL REPAIRS ARE COMPLETED. THE CONTRACTOR SHALL NOTIFY THE CM BY PHONE IMMEDIATELY IF DAMAGE TO UNDERGROUND FACILITIES IS CAUSED BY CONSTRUCTION AND THE CONTRACTOR SHALL SUBMIT A WRITTEN REPORT OF THE INCIDENT TO THE CM AND TO THE OWNER OF THE DAMAGED FACILITIES WITHIN 24 HOURS.

THE CONTRACTOR SHALL ENSURE THAT THE SITE IS GRADED PROPERLY DURING CONSTRUCTION TO AVOID STANDING WATER AND USE APPROVED BACKFILL METHODS FOR ANY TRENCH WORK REQUIRED. THE CONTRACTOR SHALL RESTORE ALL DISTURBED AREAS TO THEIR ORIGINAL CONDITIONS USING LIKE MATERIALS.

ELECTRICAL

THE CONTRACTOR SHALL INSTALL SECONDARY ELECTRICAL SERVICES ACCORDING TO THE PLANS AND CURRENT NEC AND LOCAL CODES. THE CONTRACTOR SHALL OBTAIN ALL REQUIRED ELECTRICAL INSPECTIONS.

TELCO – SHELTER (IF APPLICABLE)

IT IS THE CONTRACTOR RESPONSIBILITY TO PROVIDE AND RUN TELEPHONE CABLE FROM THE TELCO BOX ON THE H-FRAME TO THE TELCO TERMINATION POINT INSIDE THE EQUIPMENT SHELTER. CABLE SHALL CONSIST OF TWO (2) EACH 25-PAIR SHIELDED TELEPHONE CABLES AND 1 PULL STRING. CABLE WILL BE RUN INSIDE A 3" PVC PIPE. CONDUITS WILL BE OUTFITTED WITH ABOVE-GROUND FROST-SLEEVES ON BOTH ENDS, AND INTERNAL CABLES MUST BE INSTALLED WITH ABOUT 8" OF SLACK TO ALLOW FOR POTENTIAL FROST-HEAVE RELIEF. ALSO, LEAVE ONE PULL-STRING INSIDE THE CONDUIT – TIED OFF AT BOTH ENDS – FOR POTENTIAL FUTURE USE.

TELCO – OUTDOOR EQUIPMENT (IF APPLICABLE)

IT IS THE CONTRACTOR'S RESPONSIBILITY TO INSTALL 2 TELEPHONE CABLE (CAT5) AND A PULL STRING FROM THE TELCO BOX ON THE H-FRAME TO THE TELCO TERMINATION POINT INSIDE THE EQUIPMENT CABINET OR DSX LOCATION.

EQUIPMENT SHELTER (IF APPLICABLE)

THE CONTRACTOR PM MUST PREPARE A "SPREAD-FOOTING AND PERIMETER-TYPE" (OR PERIMETER WITH SLAB) FOUNDATION FOR THE SHELTER BASED ON SITE PLANS. DIMENSIONS AND SPECIFICATIONS (INCLUDING REBAR PLAN) WILL BE AS INDICATED ON APPROVED FINAL SITE DRAWINGS.

ALL CONCRETE SHALL DEVELOP A MINIMUM COMPRESSIVE STRENGTH AS SPECIFIED IN THE BUILDING SPECIFICATIONS. CONCRETE SAMPLES ARE TO BE TESTED AND THE RESULTS PROVIDED TO THE SITE DEVELOPMENT ENGINEER. IF THE RESULTS DO NOT MEET MINIMUM REQUIREMENTS AND IS DETERMINED TO BE UNACCEPTABLE, CONTRACTOR IS RESPONSIBLE FOR CORRECTING THE DEFICIENCIES.

THE GC'S FOUNDATION INSTALLATION SHALL INCLUDE:

- FOUNDATION LAYOUT
- EXCAVATION
- REINFORCING STEEL
- CONCRETE
- CONCRETE TESTING
- PITCHING TO PREVENT WATER COLLECTION ON THE 4' X 4' SHELTER ENTRANCE
- BACK FILL AND COMPACTION

COORDINATION OF SHELTER DELIVERY, OFFLOAD, AND SET, ALONG WITH ALL NECESSARY PERMITS TO TRAVERSE PUBLIC ROADS AND GAIN ACCESS TO THE SITE, AND APPROPRIATE OFFLOAD TOOLS, ARE THE RESPONSIBILITY OF THE CONTRACTOR PM (THIS APPLIES TO THINGS SUCH AS: SHELTER DELIVERY VEHICLE(S), CRANE, CULVERTS, CURB-CUTS, TRAFFIC CONTROL, ROAD RESTRICTIONS, ETC).

THE CONTRACTOR PM WILL COMMUNICATE DIRECTLY WITH THE DRIVER OF THE SHELTER DELIVERY VEHICLE TO VERIFY ACTUAL SHELTER AND CONTENTS WEIGHT – AS WEIGHED BY HIGHWAY SCALES. THE CONTRACTOR PM IS RESPONSIBLE TO COORDINATE THE APPROPRIATELY SIZED / RATED CRANE AND LIFTING EQUIPMENT (IE: SPREADER BARS, LIFTING CABLES, LIFTING SHACKLES, ETC), BASED ON THE ACTUAL WEIGHT OF SHELTER AND CONTENTS.

POWER AND EQUIPMENT BAYS (IF APPLICABLE)

THE CONTRACTOR SHALL INSTALL ALL INTER-BAY CONNECTIONS ACCORDING TO THE PLANS, WHICH INCLUDE TELCO, DC CIRCUITS, ALARM CABLES, AND BATTERIES.

ALL EQUIPMENT BAY CONTACT AND SECURE POINTS ARE MADE OF ALUMINUM. IT IS EXPECTED THAT NO POWER TOOLS SHALL BE UTILIZED TO SECURE THE CARDS AND CABLES IN TO PLACE.

ANTENNAS/COAX/POWER/FIBER

THE CONTRACTOR SHALL USE TRUE NORTH TO SET ALL ANTENNA AZIMUTHS.

THE CONTRACTOR, IN ORDER TO MEET THE PERFORMANCE REQUIREMENTS FOR E-911 FOR COMMNET, AND OTHER PERFORMANCE/QUALITY CONTROL, SHALL USE AN ANTENNA ALIGNMENT TOOL IN ORDER TO ACCURATELY CAPTURE ALIGNMENT IN AZIMUTH, TILT, ROLL AND (OPTIONALLY) AGL HEIGHT. THE CONTRACTOR SHOULD USE EQUIPMENT OF GOOD QUALITY AND PREFERRED THOUGHT THE WIRELESS INDUSTRY.

THE CONTRACTOR SHALL TRANSPORT ANTENNAS IN A MANNER THAT WILL NOT DAMAGE OR EFFECT

THE ANTENNAS PERFORMANCE AND PRE-SWEEP OR IF AVAILABLE PIM TEST PRIOR TO INSTALL.

THE CONTRACTOR SHALL INSPECT, CLEAN AND TEST FIBER CABLES PRIOR TO INSTALLING AND RECORD THE

RESULTS TO CWL CM.

THE CONTRACTOR SHALL, BY USE OF A TORQUE WRENCH, PROPERLY TORQUE JUMPER, COAX

ANTENNAS, CONNECTIONS TO INSURE A SECURE CONNECTION AND TO AVOID OVER TIGHTENING.

THE CONTRACTOR WILL ATTACH ANTENNAS USING PROPER MOUNTING BRACKETS.

THE CONTRACTOR SHALL VERIFY THAT PIPE MOUNTS ARE VERTICAL (PLUMB).

THE CONTRACTOR SHALL COLD GALVANIZE SPRAY ALL DAMAGED PARTS OF THE HOT DIP GALVANIZATION.

THE CONTRACTOR SHALL INSTALL GROUNDING IN ACCORDANCE WITH THE PLANS AND MANUFACTURER'S RECOMMENDATIONS. GROUNDING KITS TO BE INSTALLED AT INTERVALS OF 100' ON TOWER.

THE CONTRACTOR SHALL INSTALL ICE-BRIDGE FROM TOWER TO THE APPROPRIATE RF BAY OR EQUIPMENT SHELTER, IF REQUIRED.

THE CONTRACTOR SHALL ROUTE SPECIFIED COAX/POWER/FIBER CABLES ALONG CABLE TRAY/ICE-BRIDGE USING HANGERS ACCORDING TO MANUFACTURER'S RECOMMENDATIONS.

THE CONTRACTOR SHALL MARK EACH COAXIAL/POWER/FIBER CABLE IN ACCORDANCE WITH THE ANTENNA/FEEDLINE COLOR CODE SHEET AS SHOWN IN THE PLANS.

THE CONTRACTOR SHALL INSTALL HOISTING GRIPS, ACCORDING TO MANUFACTURER'S RECOMMENDATIONS (AS APPLICABLE).

THE CONTRACTOR SHALL INSTALL SURGE ARRESTORS/BIAS-T, IF REQUIRED, AND BUSS BARS IN APPROVED LOCATIONS.

THE CONTRACTOR SHALL WEATHERPROOF ALL COAX CONNECTIONS IN ACCORDANCE TO MANUFACTURER'S RECOMMENDATIONS.

THE CONTRACTOR SHALL PERFORM A "TAPE DROP" MEASUREMENT TO CONFIRM / VALIDATE ANTENNA CENTER LINE (ACL) HEIGHT.

GROUNDING

THE CONTRACTOR SHALL INSTALL THE GROUNDING SYSTEM IN ACCORDANCE WITH THE PLAN.

THE CONTRACTOR SHALL ROUTE GROUND LEADS TO ALL GROUNDING POINTS AND GROUND LEADS BY USING EXOTHERMIC WELDS OR APPROVED MECHANICAL COMPRESSION CONNECTIONS.

THE CONTRACTOR SHALL APPLY OXIDE-INHIBITING COMPOUND IN ALL REQUIRED LOCATIONS.

FOR NEW CONSTRUCTION, THE CONTRACTOR SHALL PERFORM A MEGGER TEST AFTER ALL ATTACHMENTS HAVE BEEN MADE TO THE EQUIPMENT AND PROVIDE READINGS TO THE CM FOR CLOSE OUT REPORTS.

IF REQUIRED, THE CONTRACTOR SHALL PROVIDE PHOTOS VERIFYING THAT ALL GROUND LEADS ARE IN PLACE AND CONNECTED TO SUBSURFACE GROUND RING PRIOR TO BACKFILLING GROUND SYSTEM EXCAVATION (CAD WELD OR BURNDY HY-GROUND CONNECTIONS BELOW GRADE).

MATERIALS

SECURITY AND PRESERVATION OF SITE MATERIALS AND EQUIPMENT ARE THE SOLE RESPONSIBILITY OF THE CONTRACTOR. IN THE EVENT OF DAMAGE, THE CONTRACTOR SHALL PRESERVE THE ORIGINAL CONTAINER AND CONTACT CWL/CWL CM IMMEDIATELY.

THE CONTRACTOR SHALL COMPLETE INVENTORY VERIFICATION NO LATER THAN ONE (1) BUSINESS DAY AFTER RECEIPT OF MATERIALS. TO INDICATE COMPLETION OF INVENTORY, THE CONTRACTOR SHALL SIGN AND DATED A COPY OF MATERIAL LIST AND GIVE TO THE CM. ANY MISSING MATERIAL SHALL BE REPORTED THE CM IMMEDIATELY.

NOTE: FAILURE TO PERFORM INVENTORY VERIFICATION AS REQUIRED INDICATES ACKNOWLEDGEMENT FROM THE CONTRACTOR THAT THE MATERIALS AND EQUIPMENT WERE RECEIVED IN THEIR ENTIRETY AND THE CONTRACTOR SHALL ASSUME ALL RESPONSIBILITY AND REPLACEMENT COSTS FOR EQUIPMENT SHORTAGES.

MISCELLANEOUS NOTES

THE CONTRACTOR SHALL REQUEST APPROVAL FROM THE CM FOR ANY CHANGES OR DEVIATIONS FROM THE PLANS.

FOR CHANGES THAT REQUIRED ADDITIONAL COSTS, THE CM WILL COMPLETE A CHANGE ORDER FORM OUTLINE THE REASON FOR THE CHANGE AND ITS COSTS.

SWEEP/PIM/FIBER TEST

AFTER THE INSTALLATION OF ANTENNAS & LINES, THE GENERAL CONTRACTOR SHALL SWEEP AND TEST ALL COMPONENTS AND PROVIDE A HARD COPY REPORT OF THE RESULTS. A GRAPH PRINTOUT IS TO BE PROVIDED TO THE LOCAL NETWORK OPERATIONS MANAGER AND CM BY THE GC FOR APPROVAL. SWEEP TESTS SHOULD BE PERFORMED BY THE GC TERMINATING EACH RUN OF COAX WITH A SHORT, 50 OHM LOAD, AND ANTENNA WITH JUMPER AND PROVIDING RETURN LOSS RESULTS.

AFTER THE INSTALLATION OF FIBER TRUNKS AND JUMPERS, THE GC SHOULD PROPERLY RE-TEST THE FIBER TO CONFIRM THE RESULTS ARE WITHIN TOLERANCE OF THE MANUFACTURES SUGGESTED LIMITS.

IF CONTRACTORS OFFER PIM TESTING, PIM TEST SHOULD BE CONDUCTED ON JUMPERS AND ANTENNAS TO CONFIRM THEY ARE IN TOLERANCE AND WORKING PROPERLY.

PIM TESTING STANDARD

REQUIREMENTS FOR PIM TESTING TO A LOAD

PASSING: –103DBM OR –146DBC TO A LOAD

REQUIRES APPROVAL: –102DBM TO –97DBM (–145DBC TO –140DBC) TO A LOAD

FAILING: BELOW –96DBM (–139DBC) TO A LOAD

SWEEP TEST REQUIRED PER EACH COAXIAL CABLE/ANTENNA SYSTEM

–ANTENNA ON GROUND BEFORE INSTALLING ON TOWER

–RETURN LOSS WITH 50 OHM LOAD CONNECTED TO MAIN COAXIAL LINE AND JUMPER

–DISTANCE TO FAULT (DTF) WITH 50 OHM LOAD CONNECTED TO MAIN COAXIAL LINE AND JUMPER

–RETURN LOSS WITH PRECISION SHORT CONNECTED TO MAIN COAXIAL LINE AND JUMPER

–DISTANCE TO FAULT (DTF) WITH PRECISION SHORT CONNECTED TO MAIN COAXIAL LINE AND JUMPER

–RETURN LOSS SYSTEM W/ANTENNA CONNECTED TO MAIN COAXIAL LINE AND JUMPER

–DISTANCE TO FAULT (DTF) SYSTEM W/ANTENNA CONNECTED TO MAIN COAXIAL LINE AND JUMPER

–18 IS THE PASS / FAIL LINE – ALL TESTS PERFORMED FROM THE POINT AT WHICH THE JUMPERS CONNECT TO THE DVPAS INSIDE THE GSM CABINET AND AT THE JUMPER GOING INTO THE CDMA CABINET. ALL LINES, REGARDLESS OF USE, ARE TO BE TESTED.

LEGEND

- NORTH ARROW
- ANTENNA
- GROUND ACCESS WELL
- GROUND ROD
- GROUND BUSS BAR
- MECHANICAL GRND. CONN.
- EXOTHERMIC WELD
- ELECTRIC BOX
- TELEPHONE BOX
- LIGHT POLE
- FND. MONUMENT
- SPOT ELEVATION
- SET POINT
- REVISION
- KEYED NOTE
- DETAIL REFERENCE
- ELEVATION REFERENCE
- SECTION REFERENCE
- GROUT OR PLASTER
- EXISTING BRICK
- EXISTING MASONARY
- CONCRETE
- EARTH
- GRAVEL
- PLYWOOD
- SAND
- WOOD CONT.
- WOOD BLOCKING
- STEEL
- CENTERLINE
- PROPERTY/LEASE LINE
- RIGHT OF WAY
- MATCH LINE
- WORK POINT
- GROUND CONDUCTOR
- TELEPHONE CONDUIT
- ELECTRICAL CONDUIT
- COAXIAL CABLE
- OVERHEAD SERVICE CONDUCTORS
- CHAIN LINK FENCING
- RET (REMOTE ELECTRICAL TILT)
- PDU (POWER DISTRIBUTION UNIT)
- ALARM
- RAILROAD TRACKS

Commnet
Connecting Rural America

ABn ENGINEERING
1337 E DESERT FLOWER LANE
PHOENIX, AZ 85048
PHONE: (480) 213-8524

PE SEAL

SANDEEP A. MANE
Exp. 12/31/19
CIVIL / S.E.
No. 19064
4/3/19

DESIGNER: JASON NGO
LEAD EE: SB
LEAD CE/SE: SAM

SUBMITTALS

REV.	DATE	DESCRIPTION	BY
H	1/25/19	COMMENTS	JN
I	2/13/19	COMMENTS	JN
J	2/18/19	COMMENTS	JN
K	2/19/19	FINAL CD	JN
L	4/3/19	REVISED CD	JN

THE INFORMATION CONTAINED IN THIS SET OF DOCUMENTS IS PROPRIETARY BY NATURE. ANY USE OR DISCLOSURE OTHER THAN THAT WHICH RELATES TO COMMNET WIRELESS IS STRICTLY PROHIBITED.

SITE NAME
VYA, NEVADA

PROJECT
RAW LAND MONOPOLE

SITE ADDRESS
LAT: 41° 35' 30.76358"N
LONG: 119° 52' 47.14752"W
89000A DUGWAY ROAD
GERLACH, NV 89413

SHEET TITLE
GENERAL NOTES

SHEET NUMBER
GN-1

Copyright ©Abn Engineering (AbnE), 2018. This document is a proprietary item of Abn Engineering and contains information solely for use on a specific project. It cannot be used, disclosed or reproduced in any format without AbnE's prior written permission. Only our customer has the right to use the information contained in this document for construction purpose of this project up to 12 months from seal & stamped date on this document. The user agrees to indemnify defend , & hold harmless AbnE from all claims, suits, liability, demands, judgments, or expenses arising from or related to the use or re-use of the electronic files. All rights reserved.

GREY RED BLACK

BLUE YELLOW

COLOR CODE

SCALE: NTS | 1

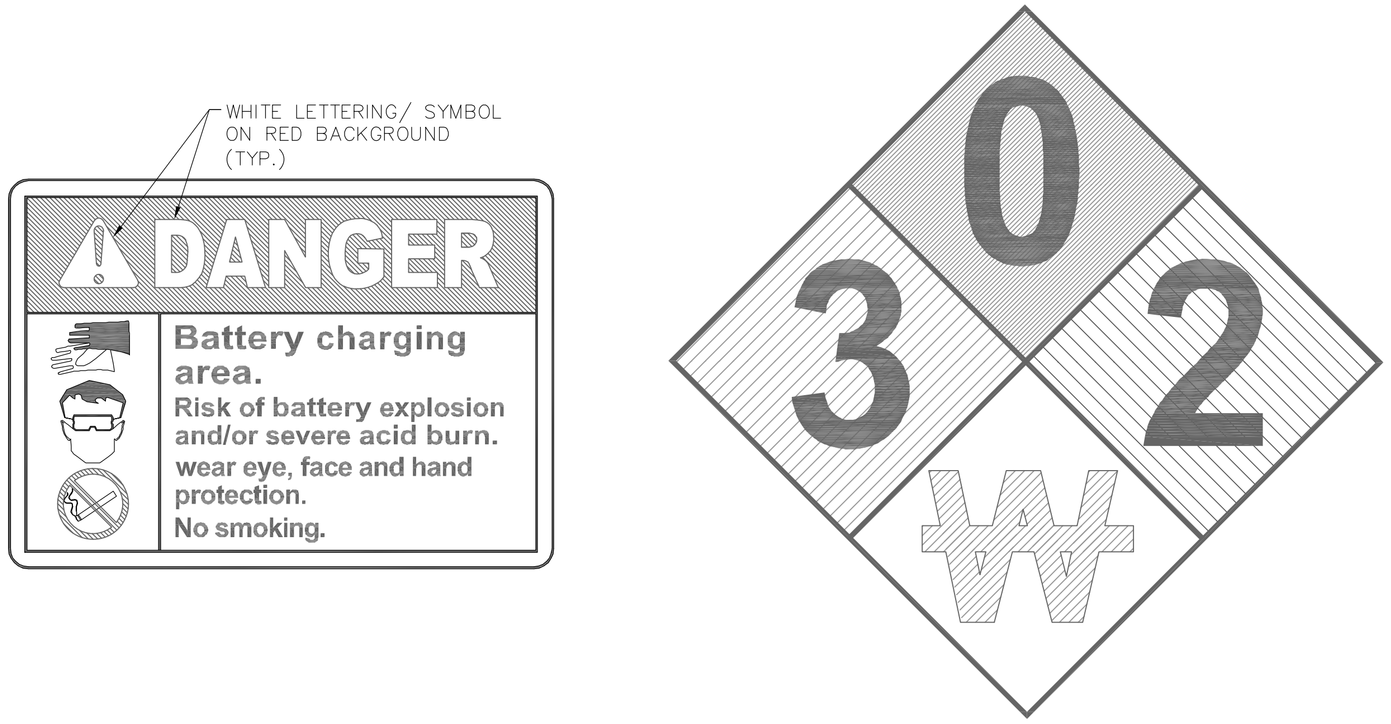

REQUIRED NFPA SIGNAGE

SCALE: NTS | 2

HAZARDOUS MATERIALS SIGNAGE

SCALE: NTS | 4

NOTES:
1. SIGN MATERIAL: 18 GA SHEET ALUMINUM ALLOY 6061–T6, 5052–H38, 5154–H38 OR EQUIVALENT.
2. LETTERING COLOR: NON REFLECTIVE BLACK SCREENED, CUT OUT PERMANENT OR REMOVABLE LEGEND.
3. BACKGROUND COLORS: REFLECTIVE WHITE: SILVER WHITE ASTM TYPE III OR TYPE IV SHEETING U.N.O. NON REFLECTIVE YELLOW RED BLUE AND GREY TRANSPARENT PASTE APPLIED OVERTHE SILVER WHITE SHEETING.
4. REFERENCE ANSI C95.2 FOR COLOR, SYMBOLS AND CONTENT CONVENTIONS
5. SIGNS SHALL BE POSTED ON ACCESS GATE AND SHELTER DOOR OR OUTDOOR EQUIPMENT CABINETS

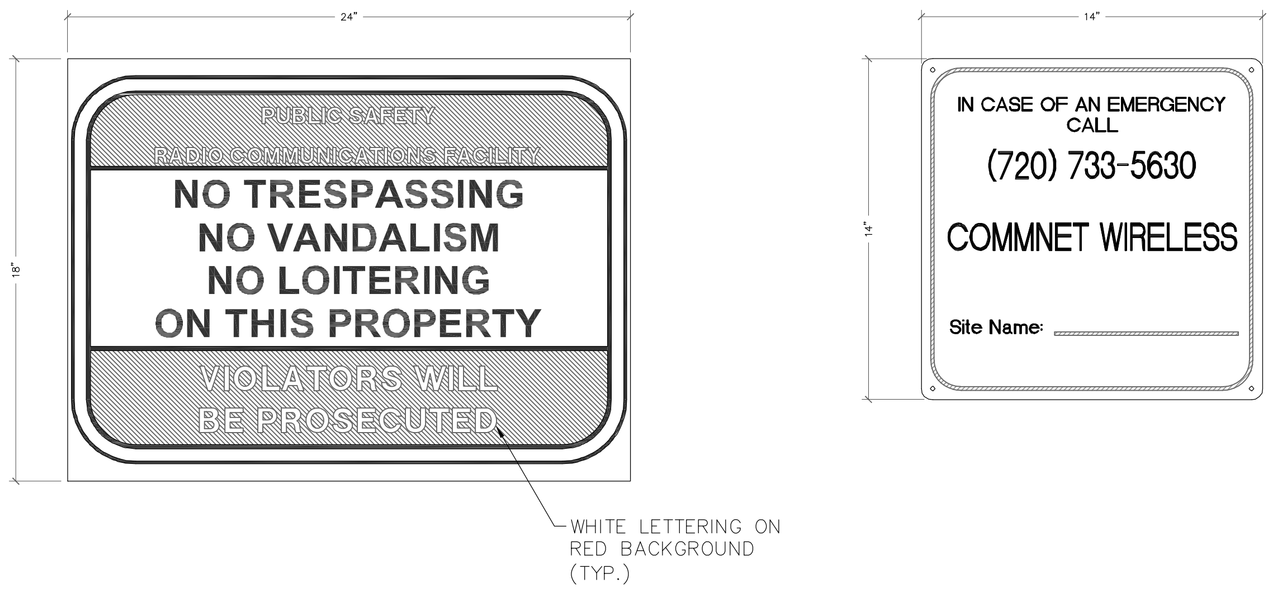

FENCE SIGNAGE

SCALE: NTS | 3

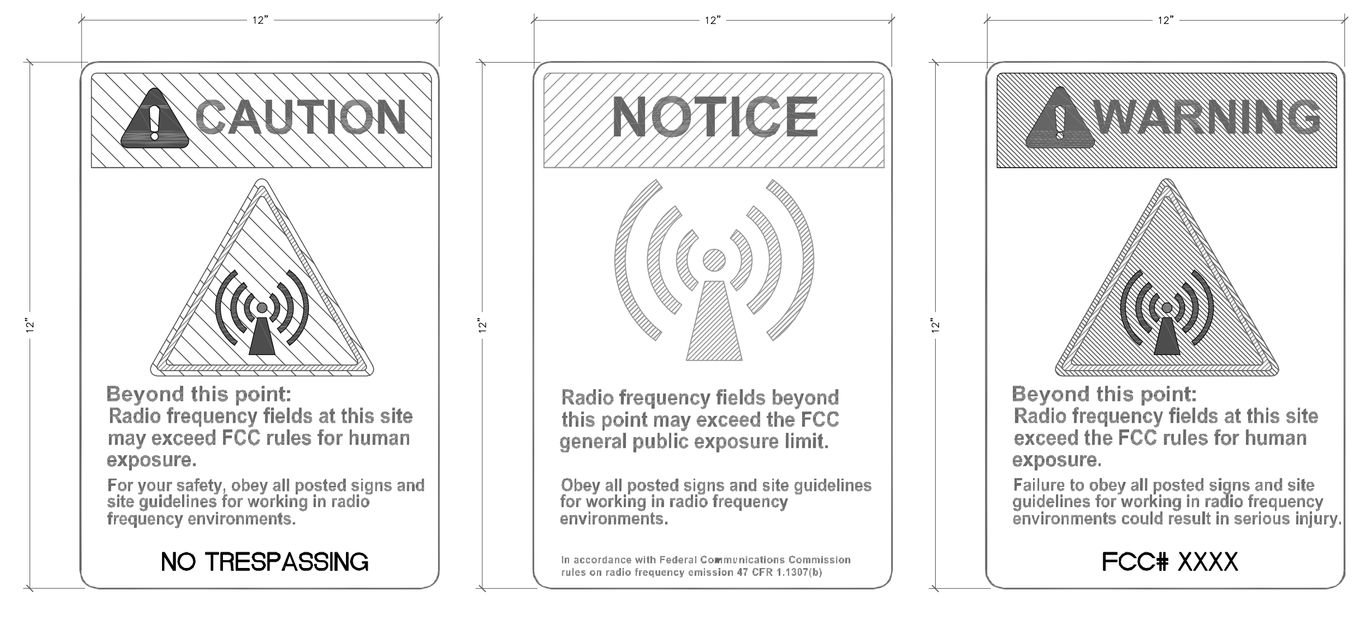

RF SIGNAGE

SCALE: NTS | 5

Commnet
Connecting Rural America

ABn ENGINEERING
1337 E DESERT FLOWER LANE
PHOENIX, AZ 85048
PHONE: (480) 213–8524

PE SEAL

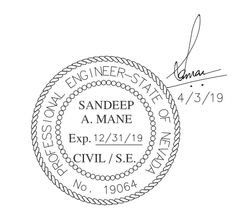

DESIGNER: JASON NGO

LEAD EE: SB

LEAD CE/SE: SAM

SUBMITTALS

REV.	DATE	DESCRIPTION	BY
H	1/25/19	COMMENTS	JN
I	2/13/19	COMMENTS	JN
J	2/18/19	COMMENTS	JN
K	2/19/19	FINAL CD	JN
L	4/3/19	REVISED CD	JN

THE INFORMATION CONTAINED IN THIS SET OF DOCUMENTS IS PROPRIETARY BY NATURE. ANY USE OR DISCLOSURE OTHER THAN THAT WHICH RELATES TO COMMNET WIRELESS IS STRICTLY PROHIBITED.

SITE NAME
VYA, NEVADA

PROJECT
RAW LAND MONOPOLE

SITE ADDRESS
LAT: 41° 35' 30.76358"N
LONG: 119° 52' 47.14752"W
89000A DUGWAY ROAD
GERLACH, NV 89413

SHEET TITLE
SITE SIGNAGE DETAILS

SHEET NUMBER
SN–1

WSUP19-0003
EXHIBIT E

Copyright ©Abn Engineering (AbnE), 2018. This document is a proprietary item of Abn Engineering and contains information solely for use on a specific project. It cannot be used, disclosed or reproduced in any format without AbnE's prior written permission. Only our customer has the right to use the information contained in this document for construction purpose of this project up to 12 months from seal & stamped date on this document. The user agrees to indemnify defend , & hold harmless AbnE from all claims, suits, liability, demands, judgments, or expenses arising from or related to the use or re-use of the electronic files. All rights reserved.

WSUP19-0003
EXHIBIT E

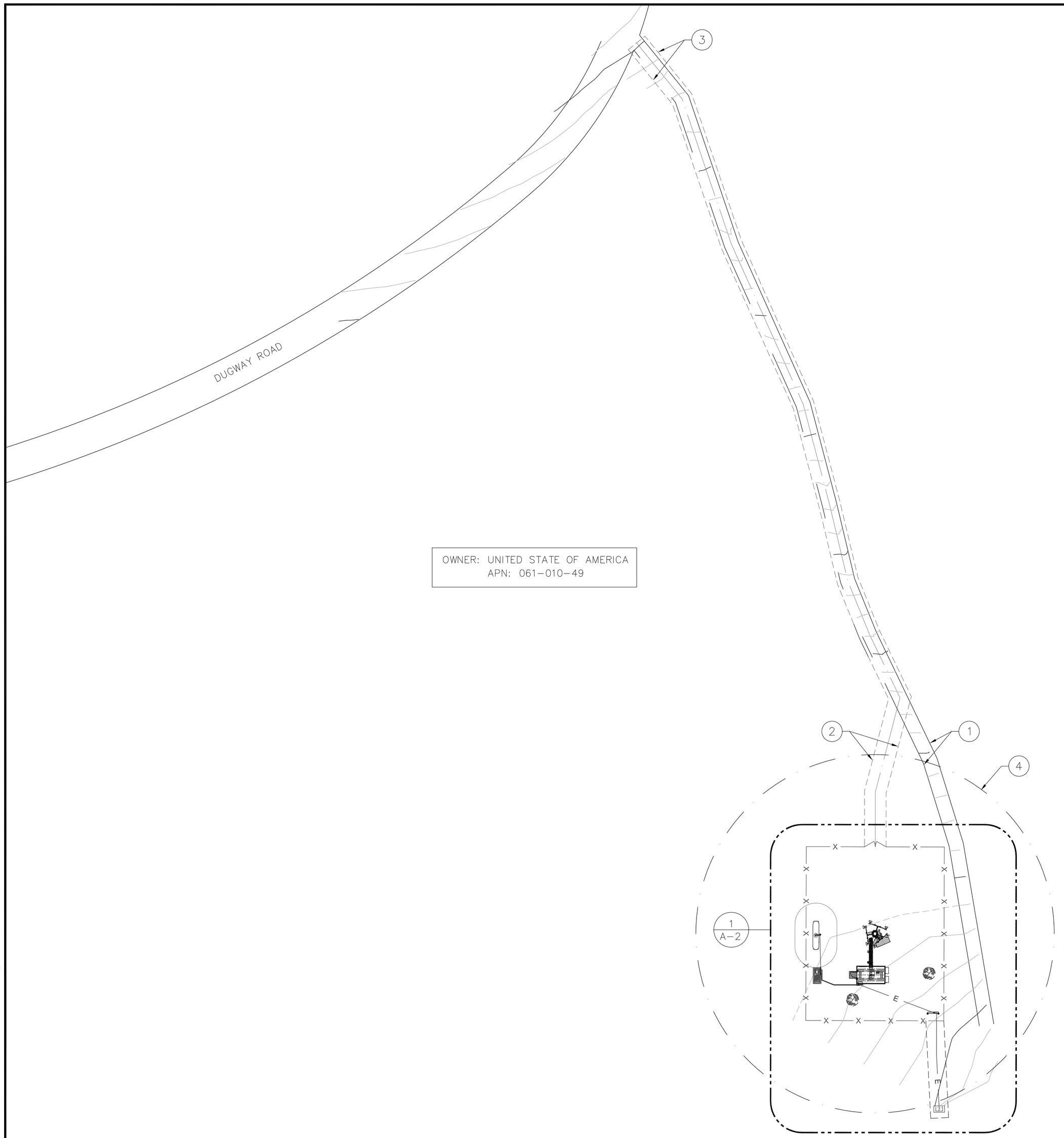

OWNER: UNITED STATE OF AMERICA
APN: 061-010-49

COMPOUND PLAN KEYED NOTES: (#)

1. (E) DIRT ROAD
2. (N) 12' WIDE DIRT ACCESS ROAD
3. (N) 12' WIDE ACCESS EASEMENT
4. CONSTRUCTION WORK AREA ±100' RADIUS, THE AREA WITHIN THIS BOUNDARY TO BE USED AS TEMPORARY CONSTRUCTION ZONE, STAGING MATERIAL AREA, VEHICLE ACTIVITY AREA AND GENERAL CONSTRUCTION PURPOSE. THIS AREA WILL RECLAIMED AND CLEANED UP AFTER CONSTRUCTION IS COMPLETE.

DIGALERT
Call Toll Free
1-800-227-2600
2 Working Days Before You Dig
NEVADA ONE-STOOP SHOP

Commnet
Connecting Rural America

ABn ENGINEERING
1337 E DESERT FLOWER LANE
PHOENIX, AZ 85048
PHONE: (480) 213-8524

PE SEAL

SANDEEP A. MANE
Exp. 12/31/19
CIVIL / S.E.
No. 19064
4/3/19

DESIGNER: JASON NGO
LEAD EE: SB
LEAD CE/SE: SAM

SUBMITTALS

REV.	DATE	DESCRIPTION	BY
H	1/25/19	COMMENTS	JN
I	2/13/19	COMMENTS	JN
J	2/18/19	COMMENTS	JN
K	2/19/19	FINAL CD	JN
L	4/3/19	REVISED CD	JN

THE INFORMATION CONTAINED IN THIS SET OF DOCUMENTS IS PROPRIETARY BY NATURE. ANY USE OR DISCLOSURE OTHER THAN THAT WHICH RELATES TO COMMNET WIRELESS IS STRICTLY PROHIBITED.

SITE NAME
VYA, NEVADA

PROJECT
RAW LAND MONOPOLE

SITE ADDRESS
LAT: 41° 35' 30.76358"N
LONG: 119° 52' 47.14752"W
89000A DUGWAY ROAD
GERLACH, NV 89413

SHEET TITLE
OVERALL SITE PLAN

SHEET NUMBER
A-1

OVERALL SITE PLAN

22"x34"SCALE: 1" = 30'-0"
11"x17" SCALE: 1" = 60'-0"
30' 15' 0' 30'

COMPOUND PLAN KEYED NOTES: (#)

1. (E) DIRT ROAD
2. (E) TREE TO BE REMOVED (TYP.)
3. (N) 12' WIDE ACCESS EASEMENT AND (N) 12' WIDE DIRT ACCESS ROAD
4. (N) 7' CHAIN LINK FENCE WITH 12' WIDE DOUBLE ACCESS GATES, SEE DETAIL 3 ON SHEET A-5
5. NOT USED
6. (N) 150' TALL MONOPOLE, SEE STRUCTURAL DRAWINGS BY OTHERS
7. (N) ICE BRIDGE, SEE DETAIL 4 ON SHEET A-5
8. (N) GPS ANTENNA, SEE DETAIL 5 ON SHEET A-5
9. (N) EQUIPMENT SHELTER (PROVIDED BY OTHERS), SEE DETAIL 1 ON SHEET S-1
10. (N) 2"ø U.G. CONDUIT FOR POWER RUN, SEE FOUNDATION DETAIL 4 ON SHEET E-3
11. (N) METER BANK, SEE DETAIL 3 ON SHEET E-3
12. (N) 10' WIDE UTILITY EASEMENT
13. (N) U.G. CONDUIT FOR POWER RUN FROM SOURCE TO METER BANK BY PROVIDER
14. (E) PAD MOUNTED TRANSFORMER. (N) COMMNET POWER SOURCE
15. CONSTRUCTION WORK AREA ±100' RADIUS, THE AREA WITHIN THIS BOUNDARY TO BE USED AS TEMPORARY CONSTRUCTION ZONE, STAGING MATERIAL AREA, VEHICLE ACTIVITY AREA AND GENERAL CONSTRUCTION PURPOSE. THIS AREA WILL RECLAIMED AND CLEANED UP AFTER CONSTRUCTION IS COMPLETE.
16. (N) PROPANE TANK ON INTERLOCK PAVER, SEE DETAILS 2 & 6 ON SHEET A-8
17. LINE OF 10' PROPANE TANK IGNITION SOURCE SPARK RADIUS PER NFPA 58
18. (N) GENERATOR, SEE DETAILS 1, 3 & 5 ON SHEET A-8
19. (N) U.G. CONDUIT FOR GAS LINE RUN, SEE DETAIL 2 ON SHEET E-3
20. (N) U.G. CONDUIT FOR START/STOP AND MONITOR, SEE DETAIL 5 ON SHEET E-3 AND ONLINE DIAGRAM
21. (N) U.G. CONDUIT FOR POWER RUN FROM GENERATOR TO ATS, SEE DETAIL 5 ON SHEET E-3 AND ONLINE DIAGRAM
22. (N) U.G. CONDUIT FOR GENERATOR BATTERY CHARGER FROM PANEL TO GENERATOR, SEE DETAIL 5 ON SHEET E-3 AND ONLINE DIAGRAM
23. (N) DISCONNECT SWITCH
24. (N) 200A ATS

LEGEND:

- EXISTING CONTOUR LINE
- GRADE TO DRAIN
- F.G. 6236.20 — FINISHED GRADE
- T.C. 6236.70 — TOP OF CONCRETE

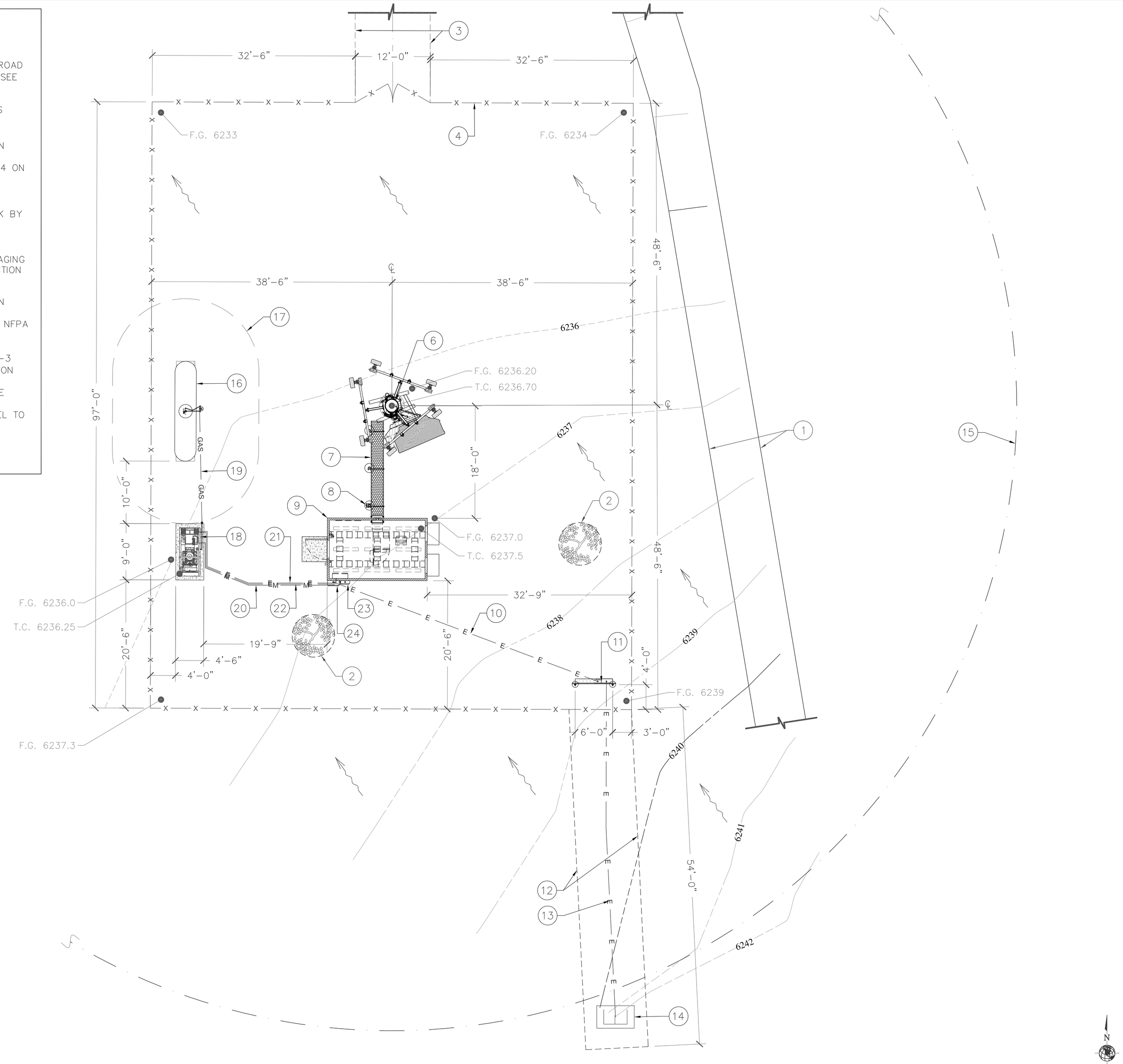

Commnet
Connecting Rural America

ABn ENGINEERING
1337 E DESERT FLOWER LANE
PHOENIX, AZ 85048
PHONE: (480) 213-8524

PE SEAL

SANDEEP A. MANE
Exp. 12/31/19
CIVIL / S.E.
No. 19064
4/3/19

DESIGNER:	JASON NGO
LEAD EE:	SB
LEAD CE/SE:	SAM

SUBMITTALS

REV.	DATE	DESCRIPTION	BY
H	1/25/19	COMMENTS	JN
I	2/13/19	COMMENTS	JN
J	2/18/19	COMMENTS	JN
K	2/19/19	FINAL CD	JN
L	4/3/19	REVISED CD	JN

THE INFORMATION CONTAINED IN THIS SET OF DOCUMENTS IS PROPRIETARY BY NATURE. ANY USE OR DISCLOSURE OTHER THAN THAT WHICH RELATES TO COMMNET WIRELESS IS STRICTLY PROHIBITED.

SITE NAME
VYA, NEVADA

PROJECT
RAW LAND MONOPOLE

SITE ADDRESS
LAT: 41° 35' 30.76358"N
LONG: 119° 52' 47.14752"W
89000A DUGWAY ROAD
GERLACH, NV 89413

SHEET TITLE
ENLARGED SITE PLAN

SHEET NUMBER
A-2.0

22"x34" SCALE: 1/8" = 1'-0"
11"x17" SCALE: 1/16" = 1'-0"
8' 6' 4' 2' 0' 8'

Copyright © Abn Engineering (AbnE), 2018. This document is a proprietary item of Abn Engineering and contains information solely for use on a specific project. It cannot be used, disclosed or reproduced in any format without AbnE's prior written permission. Only our customer has the right to use the information contained in this document for construction purpose of this project up to 12 months from seal & stamped date on this document. The user agrees to indemnify defend , & hold harmless AbnE from all claims, suits, liability, demands, judgments, or expenses arising from or related to the use or re-use of the electronic files. All rights reserved.

COMPOUND PLAN KEYED NOTES: (#)

1. (N) CONCRETE STOOP (TYP.)
2. (N) EQUIPMENT SHELTER ACCESS DOOR
3. (N) FIRE EXTINGUISHER (TYP.)
4. (N) HVAC UNIT (TYP.)
5. (N) 200A DISCONNECT SWITCH
6. (N) 200A ATS
7. (N) 200A AC PANEL
8. (N) INTERIOR GROUND BUS BAR (MGB)
9. (N) ENTRY PORTS
10. (N) EXTERIOR GROUND BUS BAR (EGB)
11. (N) TELCOBOARD
12. (N) 1'X4' FLUORESCENT LIGHT (TYP. OF 8)
13. (N) 18" WIDE CABLE TRAY ASSEMBLY, INSTALL PER MANUFACTURER SPECIFICATIONS (INDOOR APPLICATION)
14. (N) ALU CABINET
15. (N) MW RACK & FIRST NET BBU EQUIPMENT
16. (N) LIGHT SWITCH (TYP.)
17. (N) EXTERIOR LIGHT

NOTE:
ELECTRICAL PACKAGE FOR BUILDING INCLUDED EXCEPT FOR CONDUIT AND WIRING.

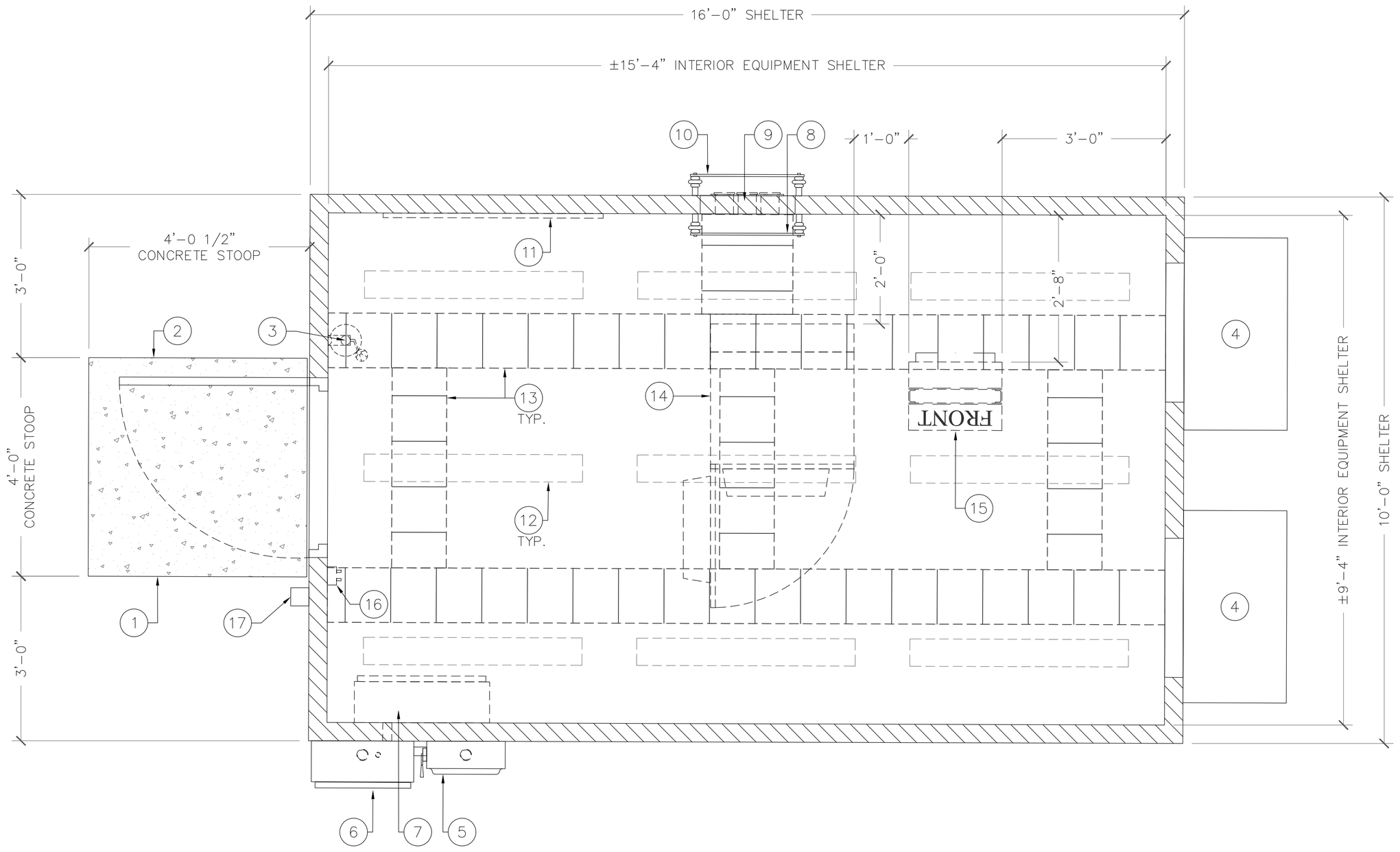

SHELTER LAYOUT

22"x34" SCALE: 3/4" = 1'-0"
11"x17" SCALE: 3/8" = 1'-0"

1

Commnet
Connecting Rural America

ABn ENGINEERING
1337 E DESERT FLOWER LANE
PHOENIX, AZ 85048
PHONE: (480) 213-8524

PE SEAL

SANDEEP A. MANE
Exp. 12/31/19
CIVIL / S.E.
No. 19064
4/3/19

DESIGNER:	JASON NGO
LEAD EE:	SB
LEAD CE/SE:	SAM

SUBMITTALS

REV.	DATE	DESCRIPTION	BY
H	1/25/19	COMMENTS	JN
I	2/13/19	COMMENTS	JN
J	2/18/19	COMMENTS	JN
K	2/19/19	FINAL CD	JN
L	4/3/19	REVISED CD	JN

THE INFORMATION CONTAINED IN THIS SET OF DOCUMENTS IS PROPRIETARY BY NATURE. ANY USE OR DISCLOSURE OTHER THAN THAT WHICH RELATES TO COMMNET WIRELESS IS STRICTLY PROHIBITED.

SITE NAME
VYA, NEVADA

PROJECT
RAW LAND MONOPOLE

SITE ADDRESS
LAT: 41° 35' 30.76358"N
LONG: 119° 52' 47.14752"W
89000A DUGWAY ROAD
GERLACH, NV 89413

SHEET TITLE
SHELTER LAYOUT

SHEET NUMBER
A-2.1

Copyright ©Abn Engineering (AbnE), 2018. This document is a proprietary item of Abn Engineering and contains information solely for use on a specific project. It cannot be used, disclosed or reproduced in any format without AbnE's prior written permission. Only our customer has the right to use the information contained in this document for construction purpose of this project up to 12 months from seal & stamped date on this document. The user agrees to indemnify defend , & hold harmless AbnE from all claims, suits, liability, demands, judgments, or expenses arising from or related to the use or re-use of the electronic files. All rights reserved.

ELEVATION KEYED NOTES: (#)

1. (N) 4' LIGHTNING ROD
2. (N) PANEL ANTENNAS
3. (N) 150' TALL MONOPOLE
4. (N) ICE BRIDGE
5. (N) GPS ANTENNA
6. (N) EQUIPMENT SHELTER
7. (N) METER BANK
8. (N) 6' CHAIN LINK FENCE WITH 1' OF BARBED WIRES (7' TALL TOTAL)
9. (N) (1) 8'ø MW DISH
10. (N) (1) 8'ø MW DISH [DIVERSITY]
11. (N) PROPANE TANK (BEYOND)
12. (N) GENERATOR (NOT VISIBLE ON THIS ELEVATION)

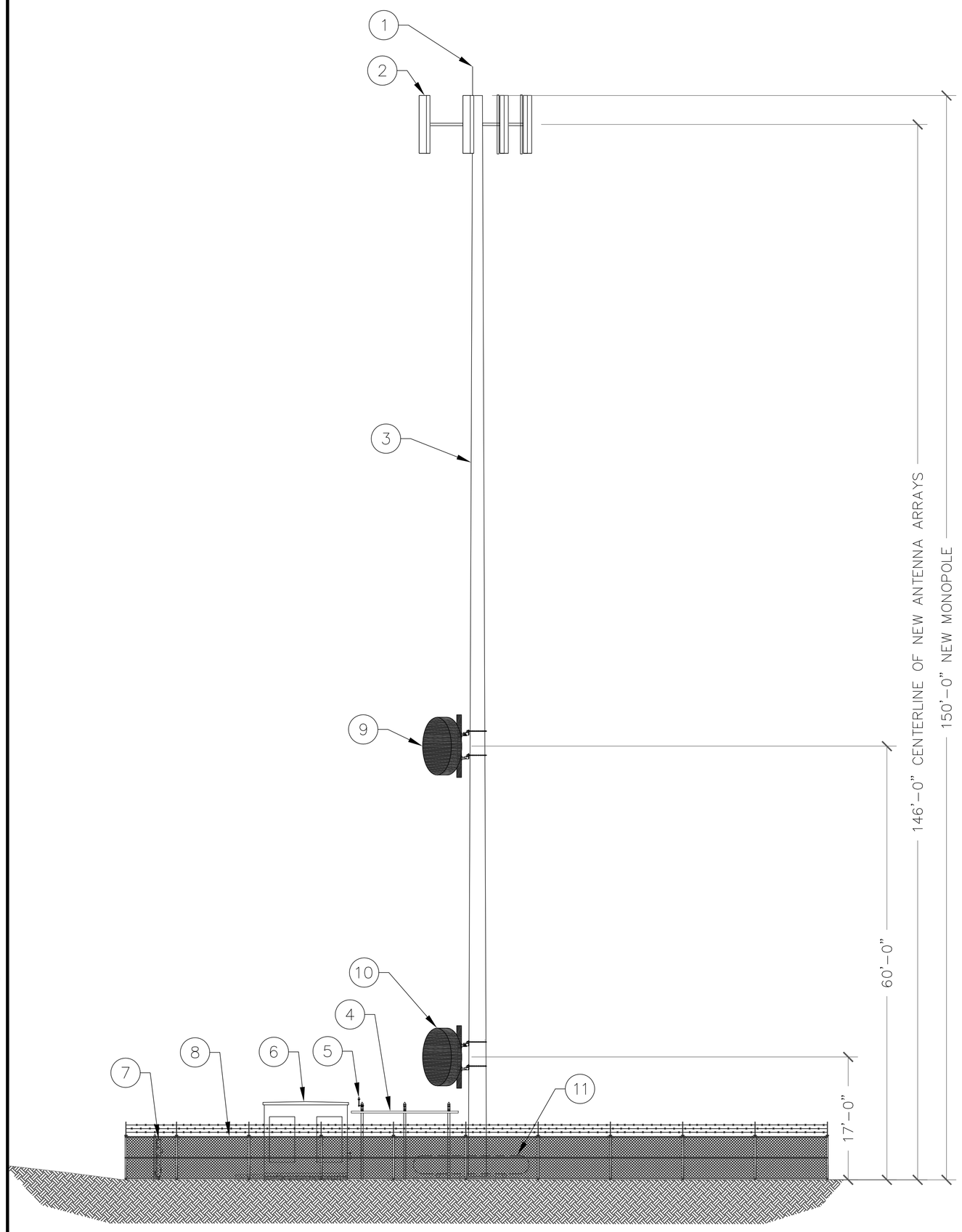

SITE ELEVATION

22"x34" SCALE: 3/32" = 1'-0"
11"x17" SCALE: 3/64" = 1'-0"
8' 4' 0' 8'

1

FIRSTNET ANTENNA LAYOUT KEYED NOTES: (#)

1. (N) (2) PANEL ANTENNAS, (3) SECTORS, TOTAL OF (6) ANTENNAS @ 20°, 140° & 260° AZIMUTH, MOUNTED ON (3) NEW SECTOR GATES @ 146'-0" RAD CENTER. REFER TO SHEET A-4 FOR ANTENNA MODEL DETAILS
2. (N) (2) RRHs PER SECTOR. TOTAL OF (6) RRHs
3. (N) (1) FTTA BOX
4. (N) 150' TALL MONOPOLE

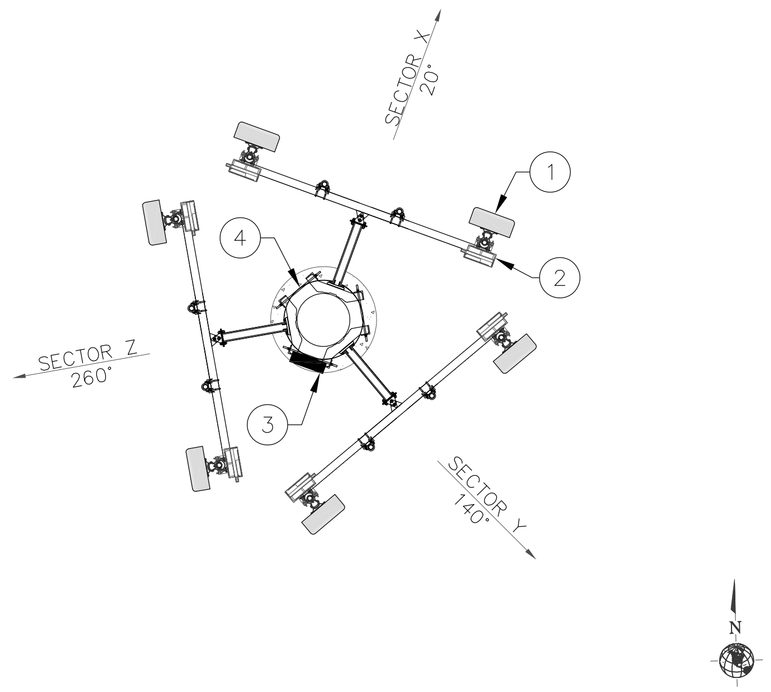

ANTENNA LAYOUT

SCALE: NTS | 2

MW DISH LAYOUT KEYED NOTES: (#)

1. (N) (1) 8'ø MW DISH @ 60' RAD CENTER (156.71° AZIMUTH)
2. (N) (1) 8'ø MW DISH [DIVERSITY] @ 17' RAD CENTER (156.71° AZIMUTH)
3. (N) 150' TALL MONOPOLE

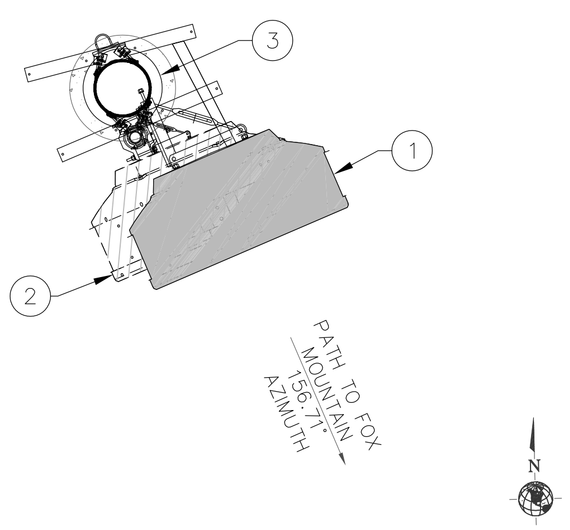

MW DISH LAYOUT

SCALE: NTS | 3

STANDOFF KEYED NOTES: (#)

1. 3' STANDOFF
2. T-ARM
3. PIPE MOUNT (TYP.)
4. SWIVEL ASSEMBLY

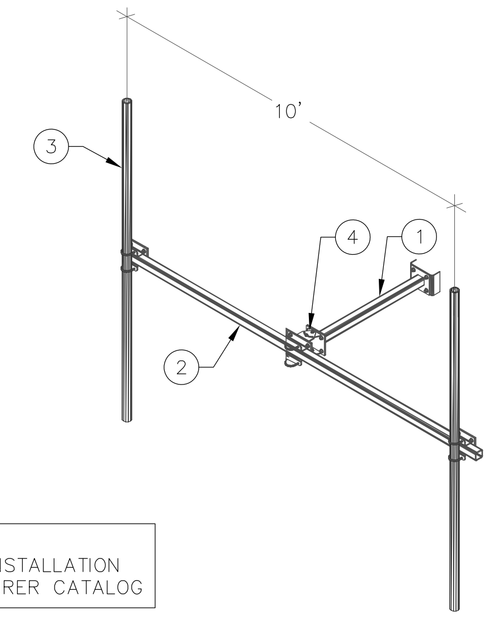

NOTE:
FOR MORE INFORMATION AND INSTALLATION PLEASE REFER THE MANUFACTURER CATALOG

TYPICAL STANDOFF

SCALE: NTS | 5

CABLE SECURED KEYED NOTES: (#)

1. TYPCAL CABLE DRESSING ALONG MOUNTING PIPE
2. CABLE BLOCK WITH UNIVERSAL SNAP-IN STANDOFF AND BANDING STRAP/ROUND MEMBER ADAPTER (TYP.)
3. TYPICAL CABLE DRESSING ALONG SECTOR GATE

NOTE:
THE LOCATION OF THE RRU IS SHOWN AS AN EXAMPLE ONLY. GC TO REVIEW ANTENNA DETAIL AND/OR SCOPE OF WORK FOR SPECIFIC INSTALLATION DETAIL OR SEEL CLARIFICATION FROM CM.

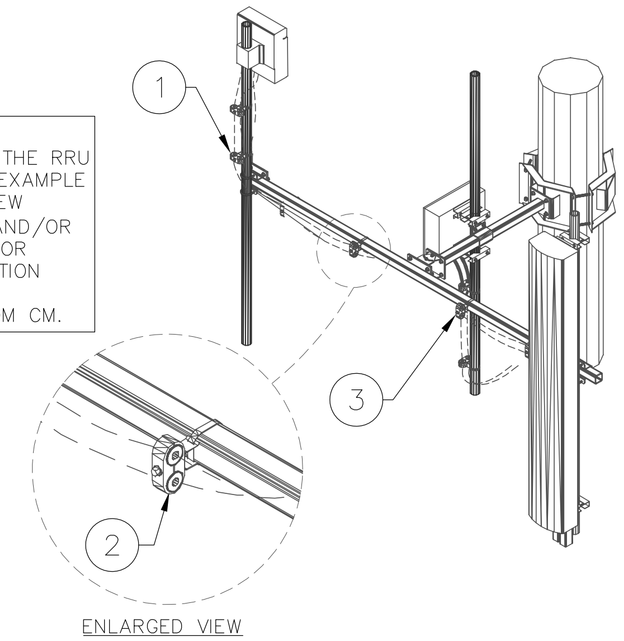

CABLE SECURED DETAIL

SCALE: NTS | 6

CABLE SECURED KEYED NOTES: (#)

1. BANDING OR ROUND MEMBER ADAPTER
2. STANDOFF
3. CABLE BLOCK
4. ALLTHREAD
5. EXESS CABLE SHALL BE COILED AND SECURED ON CABLE BLOCKS

NOTE:
THE LOCATION OF THE RRU IS SHOWN AS AN EXAMPLE ONLY. GC TO REVIEW ANTENNA DETAIL AND/OR SCOPE OF WORK FOR SPECIFIC INSTALLATION DETAIL OR SEEL CLARIFICATION FROM CM.

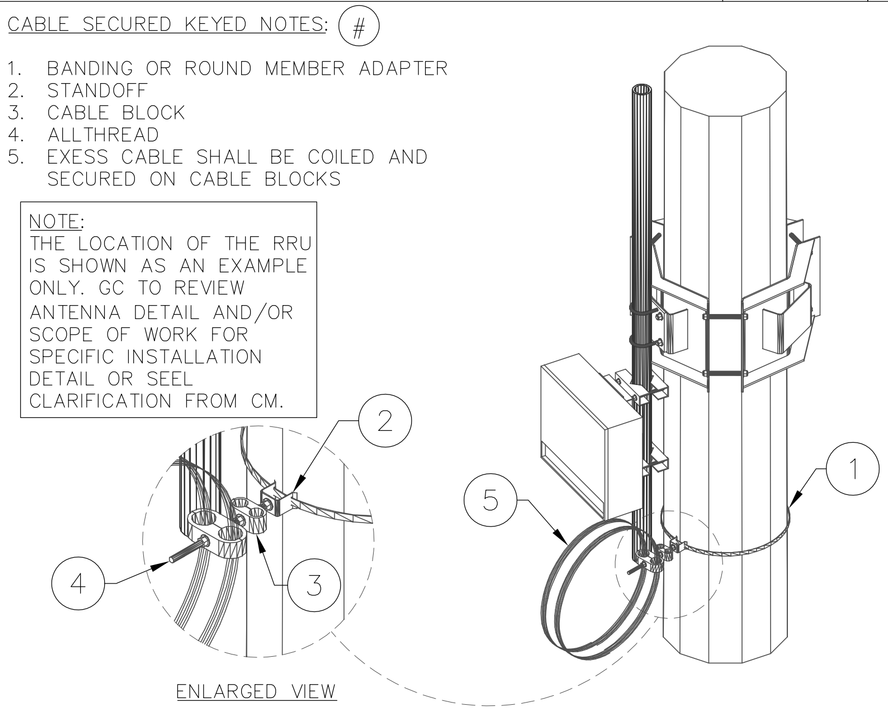

EXCESS CABLE SECURED DETAIL

SCALE: NTS | 7

Commnet
Connecting Rural America

ABn ENGINEERING
1337 E DESERT FLOWER LANE
PHOENIX, AZ 85048
PHONE: (480) 213-8524

PE SEAL

SANDEEP A. MANE
Exp. 12/31/19
CIVIL / S.E.
No. 19064
4/3/19

DESIGNER: JASON NGO

LEAD EE: SB

LEAD CE/SE: SAM

SUBMITTALS

REV.	DATE	DESCRIPTION	BY
H	1/25/19	COMMENTS	JN
I	2/13/19	COMMENTS	JN
J	2/18/19	COMMENTS	JN
K	2/19/19	FINAL CD	JN
L	4/3/19	REVISED CD	JN

THE INFORMATION CONTAINED IN THIS SET OF DOCUMENTS IS PROPRIETARY BY NATURE. ANY USE OR DISCLOSURE OTHER THAN THAT WHICH RELATES TO COMMNET WIRELESS IS STRICTLY PROHIBITED.

SITE NAME
VYA, NEVADA

PROJECT
RAW LAND MONOPOLE

SITE ADDRESS
LAT: 41° 35' 30.76358"N
LONG: 119° 52' 47.14752"W
89000A DUGWAY ROAD
GERLACH, NV 89413

SHEET TITLE
SITE ELEVATION & DETAILS

SHEET NUMBER
A-3

Copyright ©Abn Engineering (AbnE), 2018. This document is a proprietary item of Abn Engineering and contains information solely for use on a specific project. It cannot be used, disclosed or reproduced in any format without AbnE's prior written permission. Only our customer has the right to use the information contained in this document for construction purpose of this project up to 12 months from seal & stamped date on this document. The user agrees to indemnify defend , & hold harmless AbnE from all claims, suits, liability, demands, judgments, or expenses arising from or related to the use or re-use of the electronic files. All rights reserved.

WSUP19-0003
EXHIBIT E

Copyright © Abn Engineering (AbnE), 2018. This document is a proprietary item of Abn Engineering and contains information solely for use on a specific project. It cannot be used, disclosed or reproduced in any format without AbnE's prior written permission. Only our customer has the right to use the information contained in this document for construction purpose of this project up to 12 months from seal & stamped date on this document. The user agrees to indemnify defend , & hold harmless AbnE from all claims, suits, liability, demands, judgments, or expenses arising from or related to the use or re-use of the electronic files. All rights reserved.

WSUP19-0003
EXHIBIT E

NOT USED

SCALE: N.T.S. **1**

NOT USED

SCALE: N.T.S. **2**

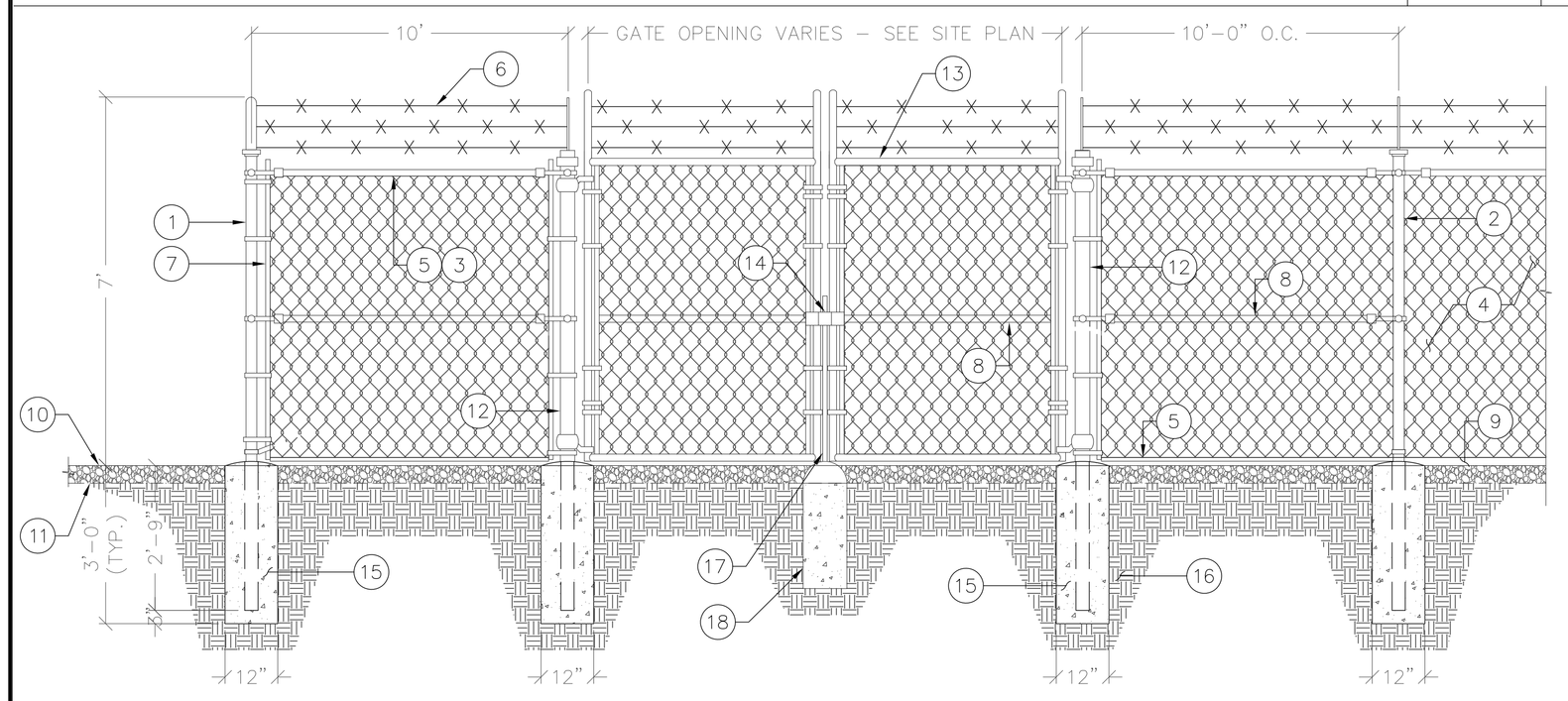

TYPICAL CHAIN LINK FENCE KEYED NOTES: (#)

1. 2-1/2" STD. (2-7/8" NOMINAL O.D.) PIPE CORNER POST SCHEDULE 40 PIPE.
2. LINE POST: 2" STD. (2-3/8" NOMINAL O.D.) SCHEDULE 40 PIPE, PER ASTM-F1083 SPACED AT MAXIMUM 10'-0" O.C.
3. TOP RAIL & BRACE RAIL: 1-1/2" PIPE, PER ASTM-F1083.
4. FABRIC: 9 GA. CORE WIRE SIZE 2" MESH, CONFORMING TO ASTM-A392.
5. TENSION WIRE: 9 GA. GALVANIZED STEEL.
6. BARBED WIRE: DOUBLE STRAND 12-1/2" O.D. TWISTED WIRE TO MATCH WITH FABRIC 14 GA., 4 PT. BARBS SPACED ON APPROXIMATELY 5" ON CENTER.
7. STRETCHER BAR.
8. POST BRACE: 1-5/8" DIA. AT CORNERS AND GATES
9. 2" MAXIMUM CLEARANCE FROM GRADE.
10. FINISHED GRADE SHALL BE UNIFORM AND LEVEL
11. SUB-GRADE
12. GATE POST 3". SCHEDULE 40 PIPE, FOR GATE WIDTHS UP TO 8 FEET USE SINGLE SWING GATE PER ASTM-F1083.
13. GATE FRAME: 1-1/2" PIPE, PER ASTM-F1083.
14. TYP. GATE LATCH VERIFY IN FIELD
15. POST CONCRETE FOUNDATION (3000 PSI)
16. NATURAL SOIL
17. DROP ROD
18. CONCRETE MUSHROOM

CHAIN LINK FENCE DETAIL

SCALE: N.T.S. **3**

ICE BRIDGE KEYED NOTES: (#)

1. 3" SCH. 40 PIPE COLUMN,
2. 3-1/2" FENCE POST CAP
3. 24"X10' GRIP SPAN BRIDGE CHANNEL
4. TRAPEZE KIT (TYP.)
5. GPS ANTENNA
6. 18" ø CONCRETE FORM TUBE 4" ABOVE GRADE & 36" BELOW GRADE (CONCRETE 3000 PSI COMP. STRENGTH MINIMUM)
7. FINISHED GRADE MATCH EXISTING SURFACING

NOTE:

1. FOR MORE INFORMATION AND INSTALLATION PLEASE REFER THE MANUFACTURER

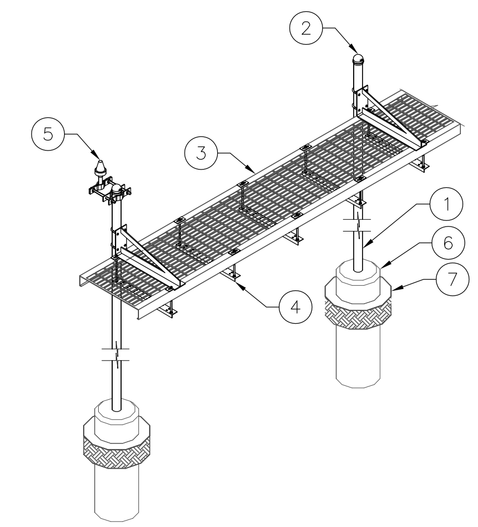

ICE BRIDGE DETAILS

SCALE: N.T.S. **4**

GPS ANTENNA MOUNT KEYED NOTES: (#)

1. ICEBRIDGE SUPPORT PIPE
2. PIPE TO PIPE MOUNTING KIT BY SUPPLIER
3. GPS ANTENNA
4. GPS ANTENNA MOUNTING PIPE
5. GPS ANTENNA COAXIAL CABLE
6. SUPPORT PIPE CAP

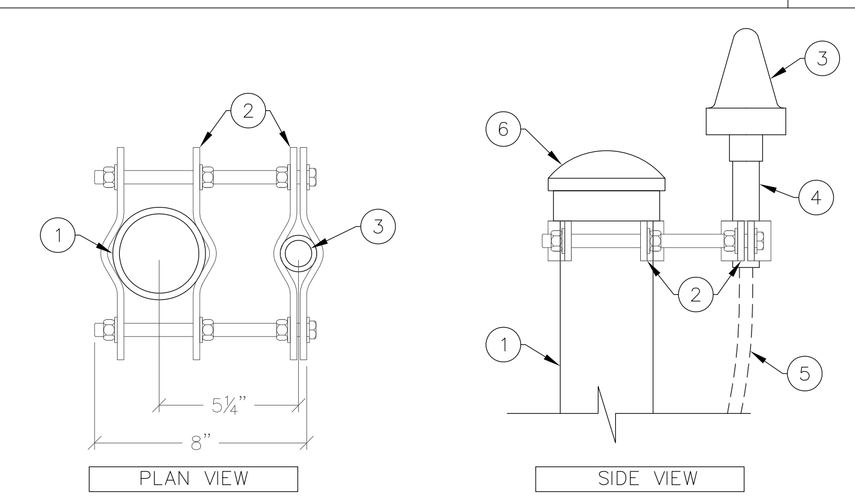

GPS ANTENNA MOUNTING DETAIL

SCALE: N.T.S. **5**

NOT USED

SCALE: N.T.S. **6**

Commnet
Connecting Rural America

ABn ENGINEERING
1337 E DESERT FLOWER LANE
PHOENIX, AZ 85048
PHONE: (480) 213-8524

PE SEAL

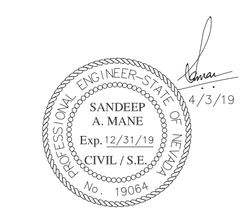

DESIGNER: JASON NGO

LEAD EE: SB

LEAD CE/SE: SAM

SUBMITTALS

REV.	DATE	DESCRIPTION	BY
H	1/25/19	COMMENTS	JN
I	2/13/19	COMMENTS	JN
J	2/18/19	COMMENTS	JN
K	2/19/19	FINAL CD	JN
L	4/3/19	REVISED CD	JN

THE INFORMATION CONTAINED IN THIS SET OF DOCUMENTS IS PROPRIETARY BY NATURE. ANY USE OR DISCLOSURE OTHER THAN THAT WHICH RELATES TO COMMNET WIRELESS IS STRICTLY PROHIBITED.

SITE NAME
VYA, NEVADA

PROJECT
RAW LAND MONOPOLE

SITE ADDRESS
LAT: 41° 35' 30.76358"N
LONG: 119° 52' 47.14752"W
89000A DUGWAY ROAD
GERLACH, NV 89413

SHEET TITLE
CONSTRUCTION DETAILS

SHEET NUMBER
A-5

FN RACK KEYED NOTES: (#)

1. RACK
2. GROUND BAR
3. RECTIFIER
4. BBU
5. MICROWAVE RADIO RACK
6. ROUTER
7. RACK ASSEMBLY
8. ATTACHED RACK TO FLOOR PER MANUFACTURER'S SPECIFICATIONS
9. FLOOR

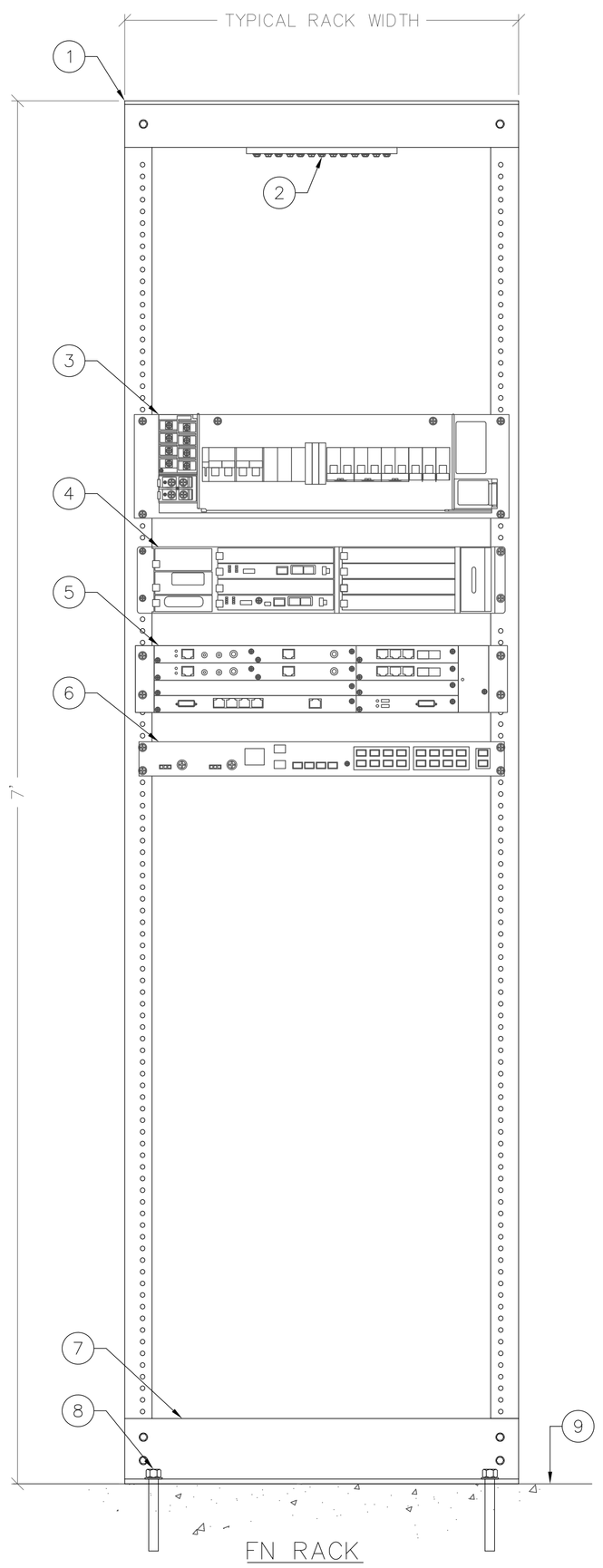

MW RACK DETAIL

SCALE: N.T.S. **1**

ALU 9929 CABINET KEYED NOTES: (#)

1. ALARM SHELF: EXTERNAL ALARMS
2. EMPTY EXPANSION BBU RACK
3. BBU SHELF
4. RRH POWER BLOCK
5. RECTIFIERS (TYP.)
6. BATTERY CONNECTIONS
7. BATTERY SHELF (TYP.)
8. AC POWER CONNECTION
9. PDP
10. RRH BREAKERS
11. FIBER OPTIC PORTS
12. DAT CABLE CONNECTION
13. AC OUTLET

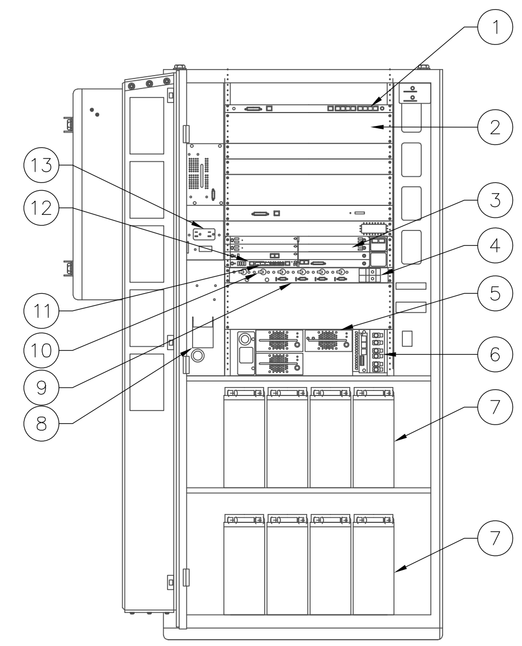

FRONT – DOOR OPEN

ALU 9929 CABINET - FRONT ELEVATION

SCALE: N.T.S. **2**

ALU 9929 CABINET KEYED NOTES: (#)

1. DC DISTRIBUTION/FIBER MANAGEMENT BOX
2. FIBER PATCH PANEL
3. EXCESS FIBER OPTIC CABLE STORAGE
4. RRH DC BLOCK

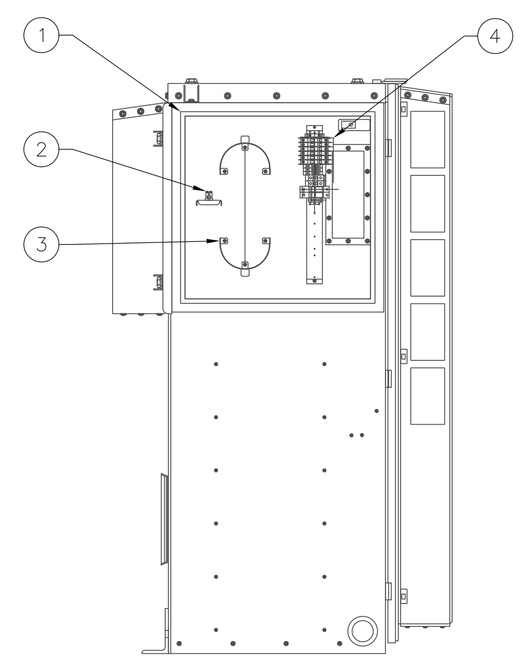

RIGHT SIDE – DOOR OPEN

ALU 9929 CABINET - SIDE ELEVATION

SCALE: N.T.S. **3**

RRH KEYED NOTES: (#)

1. RRH DC POWER CONNECTION (UNDER RED CAP) – SEE DETAIL 4 ON THIS SHEET)
2. GROUND CONNECTION
3. FIBER OPTIC CONNECTION FROM FTTA BOX (POLE MOUNTED) OR INSIDE OF LTE CABINET (BASE MOUNTED)
4. RET CONNECTIONS
5. EXTERNAL ALARMS (IF REQUIRED)

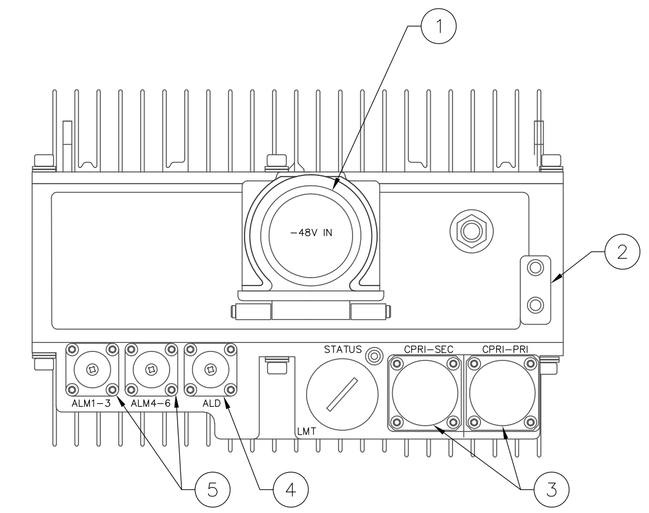

BOTTOM VIEW OF LTE REMOTE RADIO HEAD (RRH)

LTE RRH - BOTTOM VIEW

SCALE: N.T.S. **4**

RRH KEYED NOTES: (#)

1. ATTENNA JUMPER CONNECTIONS

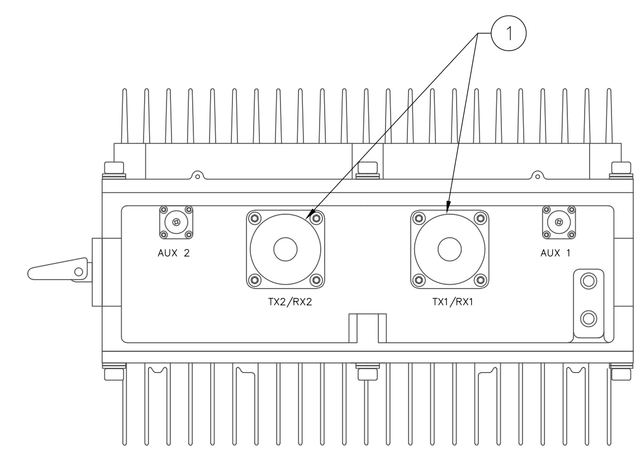

TOP VIEW OF LTE REMOTE RADIO HEAD (RRH)

LTE RRH - TOP VIEW

SCALE: N.T.S. **5**

Commnet
Connecting Rural America

ABn ENGINEERING
1337 E DESERT FLOWER LANE
PHOENIX, AZ 85048
PHONE: (480) 213-8524

PE SEAL

SANDEEP A. MANE
Exp. 12/31/19
CIVIL / S.E.
No. 19064
4/3/19

DESIGNER: JASON NGO

LEAD EE: SB

LEAD CE/SE: SAM

SUBMITTALS

REV.	DATE	DESCRIPTION	BY
H	1/25/19	COMMENTS	JN
I	2/13/19	COMMENTS	JN
J	2/18/19	COMMENTS	JN
K	2/19/19	FINAL CD	JN
L	4/3/19	REVISED CD	JN

THE INFORMATION CONTAINED IN THIS SET OF DOCUMENTS IS PROPRIETARY BY NATURE. ANY USE OR DISCLOSURE OTHER THAN THAT WHICH RELATES TO COMMNET WIRELESS IS STRICTLY PROHIBITED.

SITE NAME

VYA, NEVADA

PROJECT

RAW LAND MONOPOLE

SITE ADDRESS

LAT: 41° 35' 30.76358"N
LONG: 119° 52' 47.14752"W
89000A DUGWAY ROAD
GERLACH, NV 89413

SHEET TITLE

CONSTRUCTION DETAILS

SHEET NUMBER

A-6

Copyright © Abn Engineering (AbnE), 2018. This document is a proprietary item of Abn Engineering and contains information solely for use on a specific project. It cannot be used, disclosed or reproduced in any format without AbnE's prior written permission. Only our customer has the right to use the information contained in this document for construction purpose of this project up to 12 months from seal & stamped date on this document. The user agrees to indemnify defend , & hold harmless AbnE from all claims, suits, liability, demands, judgments, or expenses arising from or related to the use or re-use of the electronic files. All rights reserved.

WSJP19-0003
EXHIBIT E

Copyright ©Abn Engineering (AbnE), 2018. This document is a proprietary item of Abn Engineering and contains information solely for use on a specific project. It cannot be used, disclosed or reproduced in any format without AbnE's prior written permission. Only our customer has the right to use the information contained in this document for construction purpose of this project up to 12 months from seal & stamped date on this document. The user agrees to indemnify defend , & hold harmless AbnE from all claims, suits, liability, demands, judgments, or expenses arising from or related to the use or re-use of the electronic files. All rights reserved.

WSUP19-0003
EXHIBIT E

CABLE COLOR CODE SCHEDULE

TECHNOLOGY	CABLE TYPE	TAPE COLOR	COMMENTS	RRU P/N CODE (LOCATED ON RRU TAG)
LTE	POWER TRUNK	1 ORANGE WRAP	ADDITIONAL POWER OR FIBER TRUNKS FOR LTE, ADD 1 ADDITIONAL WRAP	12955731012 ZXSDR R88 S8500 (B6B) 850 CDMA&LTE DUAL MODE
LTE	FIBER TRUNK	1 ORANGE WRAP		12955731009 ZXSDR R88 S8500 (B6A) 850 STANDARD CDMA ONLY
GSM/UMTS	POWER TRUNK	1 YELLOW WRAP	ADDITIONAL POWER OR FIBER TRUNKS FOR GSM/UMTS, ADD 1 ADDITIONAL WRAP	12955731011 ZXSDR R88 S1900 (B6B) 1900 CDMA&LTE DUAL MODE
GSM/UMTS	FIBER TRUNK	1 YELLOW WRAP		12955731010 ZXSDR R88 S8500 (B6B) 1900 STANDARD CDMA ONLY
CDMA	POWER TRUNK	1 GREEN WRAP	ADDITIONAL POWER OR FIBER TRUNKS FOR CDMA, ADD 1 ADDITIONAL WRAP	
CDMA	FIBER TRUNK	1 GREEN WRAP		12955731037 850 CDMA R8882 NEW SINGLE MODE
UMTS	POWER TRUNK	1 PURPLE WRAP	ADDITIONAL POWER OR FIBER TRUNKS FOR UMTS, ADD 1 ADDITIONAL WRAP	12955731035 1900 CDMA R8882 NEW SINGLE MODE
UMTS	FIBER TRUNK	1 PURPLE WRAP		
DO	POWER TRUNK	1 WHITE WRAP	ADDITIONAL POWER OR FIBER TRUNKS FOR DO, ADD 1 ADDITIONAL WRAP	12955731023 ZXSDR R8882 S8500(B6B) – 850 GSM/UMTS
DO	FIBER TRUNK	1 WHITE WRAP		12955731024 ZXSDR R8882 S1900(B6B) – 1900 GSM/UMTS
TECHNOLOGY	CABLE TYPE	TAPE COLOR	COMMENTS	
LTE	POWER TRUNK	1 ORANGE+FREQ+SECTOR		
LTE	FIBER TRUNK	1 ORANGE+FREQ+SECTOR		
GSM/UMTS	POWER TRUNK	1 YELLOW+FREQ+SECTOR		
GSM/UMTS	FIBER TRUNK	1 YELLOW+FREQ+SECTOR		
CDMA	POWER TRUNK	1 GREEN+FREQ+SECTOR		
CDMA	FIBER TRUNK	1 GREEN+FREQ+SECTOR		
UMTS	POWER TRUNK	1 PURPLE+FREQ+SECTOR		
UMTS	FIBER TRUNK	1 PURPLE+FREQ+SECTOR		
DO	POWER TRUNK	1 WHITE+FREQ+SECTOR		
DO	FIBER TRUNK	1 WHITE+FREQ+SECTOR		
FREQUENCY	COLOR			
700	BLACK/BLANK			
850	GREY			
1900	BROWN			
SECTOR	CABLE TYPE	COLOR		
X	COAX JUMPER	RED		
Y	COAX JUMPER	WHITE		
Z	COAX JUMPER	BLUE		
EXAMPLE	COLOR CODE FOR LTE FOR 700MHz –1 ORANGE WRAP, 1 BLACK OR LEAVE BLANK (CABLE COLOR IS ALREADY BLACK) ON POWER / FIBER TRUNK			
	COLOR CODE FOR GSM/UMTS FOR 850 MHz – 1 YELLOW WRAP, 1 GREY			

CABLE COLOR CODDE SCHEDULE — SCALE: N.T.S. — 1

LTE RRU POWER COLOR CODE KEYED NOTES: (#)

1. LTE SECTORS
2. BLACK WIRE
3. RED / WHITE WIRE
4. RED / YELLOW WIRE
5. RED / GREEN WIRE

LTE POWER:
RED / WHITE – X
RED / YELLOW – Y
RED / GREEN – Z

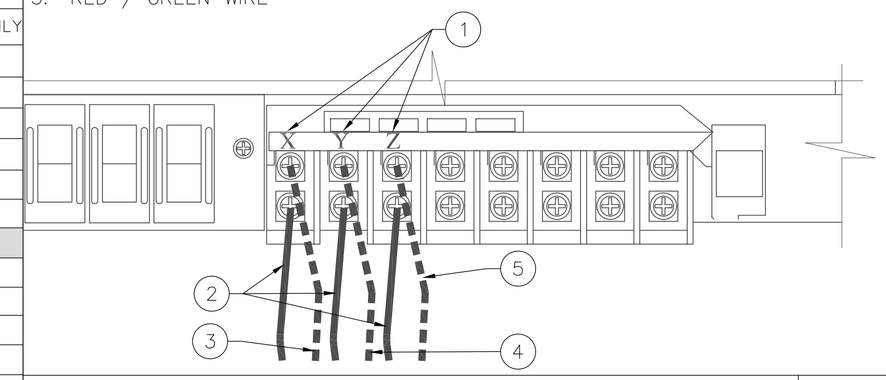

RRU POWER COLOR CODE - LTE — SCALE: N.T.S. — 2

WIRING DIAGRAM KEYED NOTES: (#)

1. POWER CONNECTIONS TO ROUTER
2. POWER CONNECTIONS TO MW RADIO

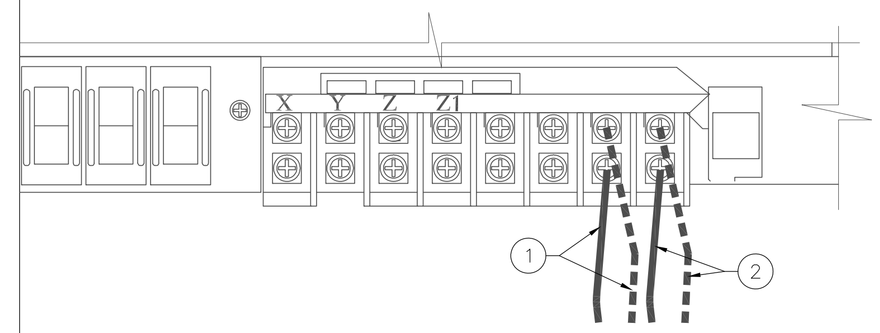

WIRING DIAGRAM DETAIL — SCALE: N.T.S. — 4

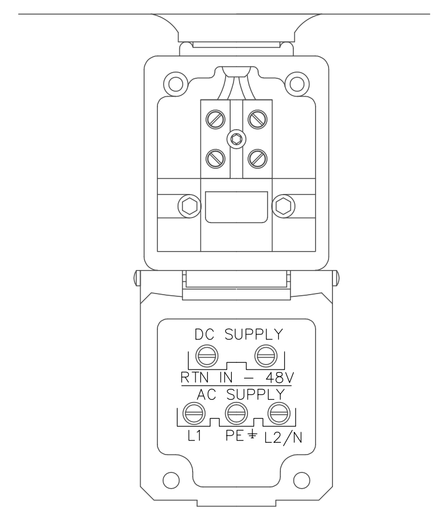

LTE RRH POWER CONNECTIONS — SCALE: N.T.S. — 3

FTTA CONNECTION BOX KEYED NOTES: (#)

1. FIBER AND POWER JUMPERS CONSTRUCTOR SHALL FOLLOW COLOR CODE 1/A–5
2. FIBER TRUNK (S)
3. POWER TRUNK FROM LTE RACK TO FTTA

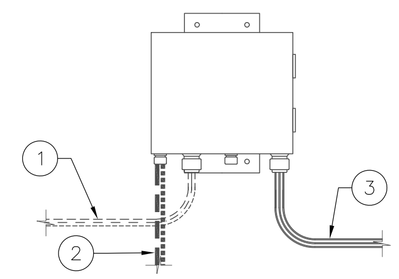

FTTA CONNECTION BOX — SCALE: N.T.S. — 5

FTTA DISTRIBUTION BOX KEYED NOTES: (#)

1. SIDE A FIBER DISTRIBUTION
2. SIDE B POWER DISTRIBUTION
3. FIBER TRUNK
4. FIBER JUMPERS
5. POWER JUMPERS
6. FIBER JUMPERS COMING OUT
7. POWER JUMPERS COMING OUT
8. FIBER TRUNK GOING IN
9. POWER TRUNK GOING IN

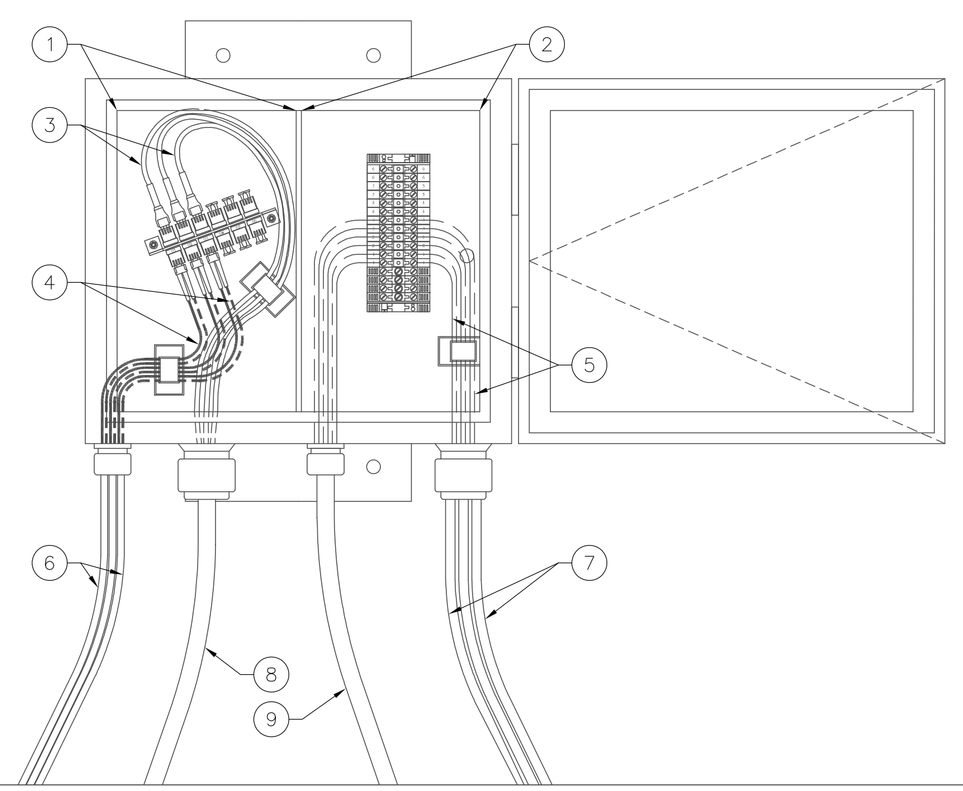

FTTA DISTRIBUTION BOX CONNECTION DETAIL — SCALE: N.T.S. — 6

LTE FTTA POWER CONNECTION KEYED NOTES: (#)

1. RED SIDES OF BLOCKS TYP.
2. BLACK SIDES OF BLOCKS (SHOWN SHADED) TYP.
3. –48 VOLT RED WIRE FROM CABINET TO RED SIDE TO RED SIDE OF BLOCK HERE
4. FROM ZTE CABINET –48 RETURN (BLACK WIRE) LANDS HERE
5. POWER JUMPER BLUE WIRE LANDS HERE
6. POWER JUMPER BLACK WIRE LANDS HERE

FTTA BOX 1:
1 – LTE X
2 – LTE Y
3 – LTE Z
4 – LTE X
5 – LTE Y
6 – LTE X

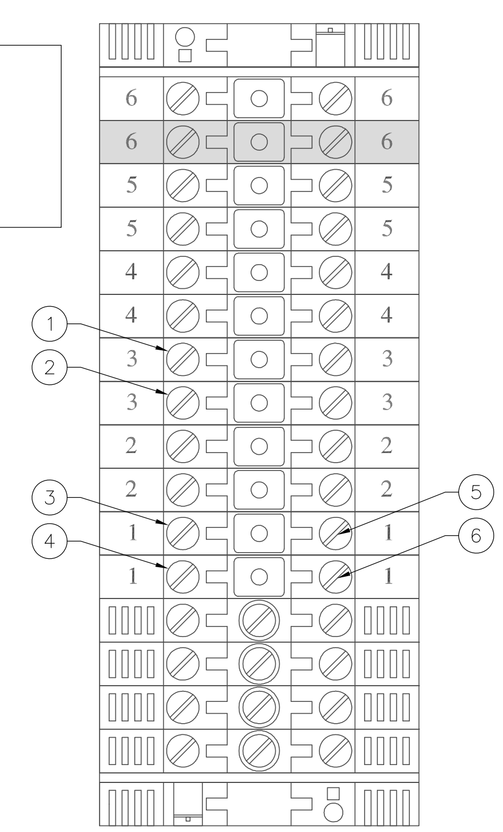

LTE FTTA POWER CONNECTION — SCALE: N.T.S. — 7

FIBER TRUNK CONNECTION KEYED NOTE: (#)

1. FTTA FIBER BLOCK

FTTA BOX 1:
LTE – FIBER TRUNK 1
FIBER 1 – PORT 01 – X
FIBER 2 – PORT 02 – Y
FIBER 3 – PORT 03 – Z
FIBER 4 – PORT 04 – X
FIBER 5 – PORT 05 – Y
FIBER 6 – PORT 06 – Z
#1 TRUNK 7 SPARES

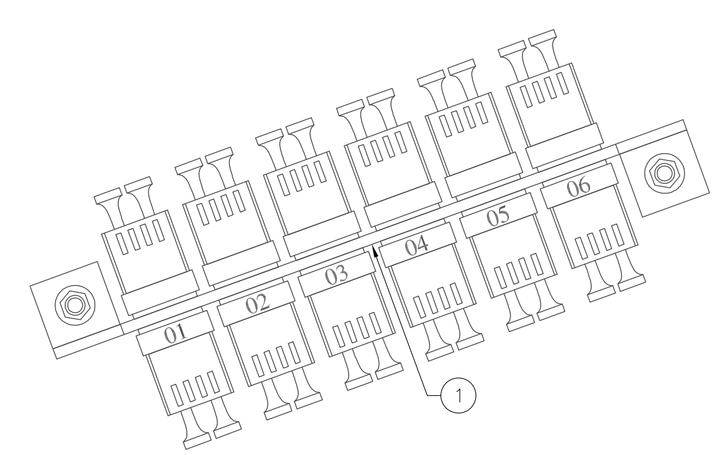

NOTE:
CABINET AND/OR BBU EQUIPMENT RECEIVED IN THE FIELD MAY VARY AND THEREFORE COULD CHANGE PORT ASSIGNMENTS, FIBER ASSIGNMENT IN BOTH CABINET AND FTTA BOXES. ANY CHANGES MUST BE REDLINED IN THE DRAWINGS AND REPORTED BACK TO THE CONSTRUCTION MANAGER

FIBER TRUNK CONNECTION — SCALE: N.T.S. — 8

Commnet
Connecting Rural America

ABN ENGINEERING
1337 E DESERT FLOWER LANE
PHOENIX, AZ 85048
PHONE: (480) 213–8524

PE SEAL

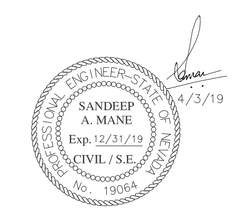

DESIGNER: JASON NGO
LEAD EE: SB
LEAD CE/SE: SAM

SUBMITTALS

REV.	DATE	DESCRIPTION	BY
H	1/25/19	COMMENTS	JN
I	2/13/19	COMMENTS	JN
J	2/18/19	COMMENTS	JN
K	2/19/19	FINAL CD	JN
L	4/3/19	REVISED CD	JN

THE INFORMATION CONTAINED IN THIS SET OF DOCUMENTS IS PROPRIETARY BY NATURE. ANY USE OR DISCLOSURE OTHER THAN THAT WHICH RELATES TO COMMNET WIRELESS IS STRICTLY PROHIBITED.

SITE NAME
VYA, NEVADA

PROJECT
RAW LAND MONOPOLE

SITE ADDRESS
LAT: 41° 35' 30.76358"N
LONG: 119° 52' 47.14752"W
89000A DUGWAY ROAD
GERLACH, NV 89413

SHEET TITLE
CONSTRUCTION DETAILS

SHEET NUMBER
A–7

CONCRETE SLAB KEYED NOTES: (#)

1. 3/4" CHAMFER EDGE (TYP.)
2. 3" REINFORCEMENT CLEARANCE FROM SLAB PERIMETER
3. NATURAL SOIL
4. 6" THK. MIN. CRUSHED STONE OR COMPACTED GRANULAR FILL
5. USE 6 MIL PLASTIC MOISTURE BARRIER
6. FINISHED GRADE LEVEL
7. 8" THK. SLAB W/ #4 @ 12" O.C. EACH WAY; SLAB FINISH 4" ABOVE GRADE

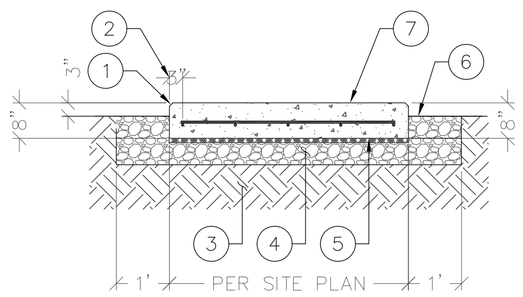

NOTE:
USE ITW RED HEAD TRUBOLT + WEDGE ANCHOR 1/2" DIA. ANCHOR BOLT W/ 3-1/4" MIN EMBEDMENT (TOTAL 4); VERIFY SIZE W/ MANUFACTURER SPECS.

GENERATOR SLAB DETAILS — N.T.S. — 1

FIRST STAGE REGULATOR KEYED NOTES: (#)

1. FIRST STAGE REGULATOR; COORDINATE W/ PROPANE SUPPLIER
2. 1-1/2" A53/53M PIPE FITTING 90° ELBOW
3. 1-1/2" A53/53M PIPE (VERIFY PIPE BY INSPECTOR OF RECORD PRIOR TO COATING WITH COAL TAR EPOXY
4. PIPE FITTING
5. TRACER WIRE INSTALLED ON ALL POLYETHYLENE PIPE
6. 1-1/2" POLYETHYLENE PIPE
7. PROPANE TANK

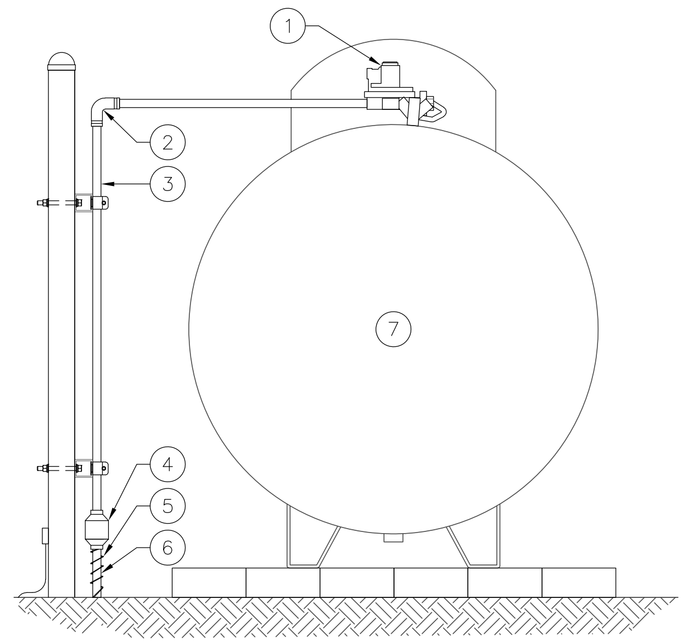

1ST STAGE REGULATOR DETAIL — N.T.S. — 2

GENERATOR CONCRETE SLAB KEYED NOTES: (#)

1. OUTLINE OF GENERATOR
2. 3/4" CHAMFER EDGE (TYP.)
3. LOW VOLTAGE STUB-UP AREA (SEE NOTE 3)
4. PRIMARY CB CONNECTION BOX OPENING
5. PRIMARY HIGH VOLTAGE STUB-UP AREA
6. SECONDARY HIGH VOLTAGE STUB-UP AREA
7. SECOND STAGE REGULATOR, SEE DETAIL 5 ON THIS SHEET
8. ITW RED HEAD TRUBOLT + WEDGE ANCHOR 1/2" DIA. ANCHOR BOLT W/ 3-1/4" MIN EMBEDMENT (MIN. 4); VERIFY SIZE W/ MANUFACTURER SPECS.

GENERATOR FOUNDATION NOTES:

1. VERIFY DIMENSIONS WITH GENERATOR MANUFACTURER ALONG WITH LOCATION OF BASE FRAME CONNECTIONS.
2. VERIFY DIMENSIONS WITH GENERATOR MANUFACTURER ALONG WITH LOCATION OF OPEN STUB-UP AREA THROUGH FUEL TANK BASE.
3. CONNECTION POINTS FOR CONTROL WIRES PROVIDED IN THE LOW VOLTAGE CONNECTION BOX (USE LOW VOLTAGE STUB UP AREA)
4. REMOVE ALL LOOSE INORGANIC OR UNSUITABLE SOIL TO UNDISTURBED BEARING STRATA W/ ALLOWABLE SOIL BEARING PRESSURE OF 1500 PSF.
5. CONCRETE STRENGTH SHALL BE 2500 PSI, MIN.
6. SUB-GRADE SHALL BE COMPACTED 95% AND INDEPENDENTLY TESTED.
7. GENERAL SUBCONTRACTOR TO FOLLOW SUBGRADE PREPARATION STATED IN GEOTECHNICAL REPORT

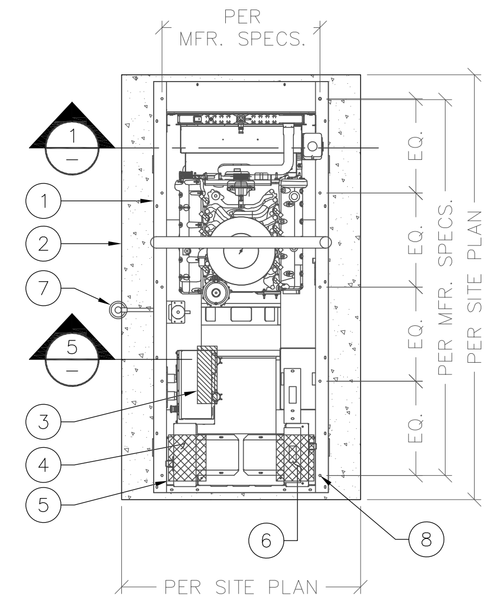

PLAN VIEW

GENERATOR CONC. SLAB DETAIL — N.T.S. — 3

NOT USED — N.T.S. — 4

2ND STAGE REGULATOR KEYED NOTES: (#)

1. OUTDOOR GENERATOR.
2. SECOND STAGE REGULATOR – CONTRACTOR TO VERIFY WITH GENERATOR MANUFACTURER PRIOR TO INSTALL.
3. 1-1/2" A53/53M PIPE (VERIFY PIPE BY INSPECTOR PRIOR TO COATING WITH COAL TAR EPOXY).
4. 1-1/2" A53/53M PIPE FITTING 90° ELBOW.
5. SHUT OFF VALVE.
6. 1-1/2" POLYETHYLENE PIPE.
7. TRACER WIRE INSTALLED ON ALL POLYETHYLENE PIPE.
8. STRUT STRAP & P-1000T UNISTRUT ANCHORED TO CONC. SLAB W/ 1/4"ø x2" (L) RED HEAD HAMMER-SET NAIL DRIVE OR EQUIV.
9. MECHANICAL GROUND & #2 TINNED GROUND LEAD TO EXTERIOR GROUND RING.

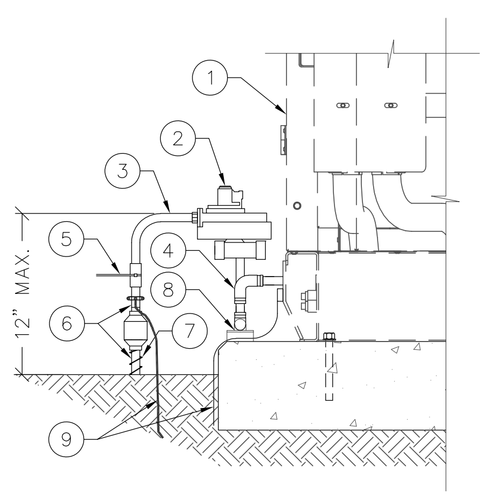

2ND STAGE REGULATOR DETAIL — N.T.S. — 5

MONITOR & GAS LINE KEYED NOTES: (#)

1. FIRST STAGE REGULATOR; COORDINATE WITH PROPANE SUPPLIER
2. REMOTE READY HALL EFFECT MODULE TWINSITES AND R3D HALL EFFECT MODULE
3. 2"ø STAND OFF PIPE CALLED 4' ABOVE GRADE WITH 18" EMBEDMENT IN CONCRETE PIER
4. 3/8" GALV. THRU BOLT (TYP.)
5. 14" LONG P1000T UNISTRUT WITH SUPERSTRUT PIPE STRAP (TYP.)
6. 3/4" SCH. 40 UV RATED PVC PIPE
7. 1-1/2" A53/53M PIPE (VERIFY PIPE BY INSPECTOR OF RECORD PRIOR TO COATING WITH COAL TAR EPOXY)
8. EXPLOSION- PROOF FITTING RESPA-EYF75-AL
9. TRACER WIRE INSTALLED ON ALL POLYETHYLENE PIPE
10. PIPE FITTING
11. PROPANE TANK

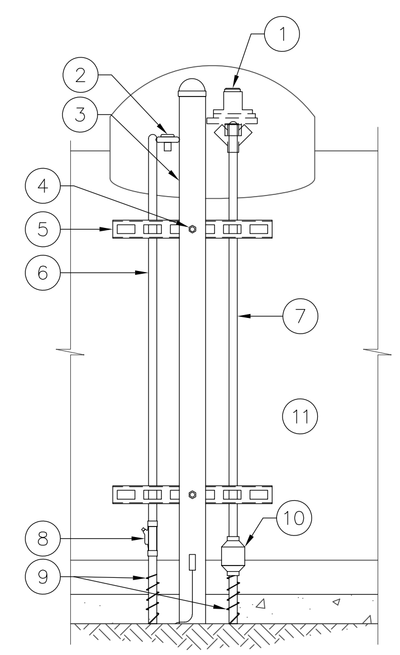

MONITOR & GAS LINE DETAIL — N.T.S. — 6

Commnet
Connecting Rural America

ABn ENGINEERING
1337 E DESERT FLOWER LANE
PHOENIX, AZ 85048
PHONE: (480) 213-8524

PE SEAL

NATIONAL CIVIL ENGINEER — STATE OF NEVADA — SANDEEP A. MANE — Exp. 12/31/19 — CIVIL / S.E. — No. 19064 — 4/3/19

DESIGNER: JASON NGO
LEAD EE: SB
LEAD CE/SE: SAM

SUBMITTALS

REV.	DATE	DESCRIPTION	BY
H	1/25/19	COMMENTS	JN
I	2/13/19	COMMENTS	JN
J	2/18/19	COMMENTS	JN
K	2/19/19	FINAL CD	JN
L	4/3/19	REVISED CD	JN

THE INFORMATION CONTAINED IN THIS SET OF DOCUMENTS IS PROPRIETARY BY NATURE. ANY USE OR DISCLOSURE OTHER THAN THAT WHICH RELATES TO COMMNET WIRELESS IS STRICTLY PROHIBITED.

SITE NAME
VYA, NEVADA

PROJECT
RAW LAND MONOPOLE

SITE ADDRESS
LAT: 41° 35' 30.76358"N
LONG: 119° 52' 47.14752"W
89000A DUGWAY ROAD
GERLACH, NV 89413

SHEET TITLE
CONSTRUCTION DETAILS

SHEET NUMBER
A-8

Copyright ©Abn Engineering (AbnE), 2018. This document is a proprietary item of Abn Engineering and contains information solely for use on a specific project. It cannot be used, disclosed or reproduced in any format without AbnE's prior written permission. Only our customer has the right to use the information contained in this document for construction purpose of this project up to 12 months from seal & stamped date on this document. The user agrees to indemnify defend , & hold harmless AbnE from all claims, suits, liability, demands, judgments, or expenses arising from or related to the use or re-use of the electronic files. All rights reserved.

WSUP19-0003
EXHIBIT E

FOUNDATION KEYED NOTES: (#)

1. 6" CONCRETE SLAB W/ #4 @ 8" O.C. EACH WAY
2. (3) #5 CONTINUOUS REINFORCING TYP. TOP & BOTTOM OF PERIMETER FOOTING
3. TYPICAL TURNDOWN AT PERIMETER
4. CONCRETE STOOP (TYP.)
5. ANCHOR BOLTS AND TIE DOWN PLATE IN ACCORDANCE WITH MANUFACTURER'S SHELTER DRAWINGS
6. USE SPRAY ON CURING AGENT
7. MIN. 1/2" CHAMFER ON ALL EXPOSED EDGES BOTH VERTICAL & HORIZONTAL
8. (3) #5 TOP
9. #4 STIRRUPS @ 14" O.C. (TYP.)
10. (3) #5 BOTTOM
11. SHELTER WALL AND FLOOR
12. FINISH GRADE
13. 6 MIL PLASTIC MOISTURE BARRIER
14. 6" THK MIN. CRUSHED STONE OR COMPACTED GRANULAR FILL (SEE NOTE 6), ALSO REFER GEOTECHNICAL REPORT FOR REQUIRED BACKFILL SPECIFICATION
15. FILL TO LEVEL W/ NATURAL BACKFILL

SHELTER FOUNDATION NOTES

1. CONTRACTOR TO VERIFY DIMENSIONS WITH SHELTER MANUFACTURER.
2. REMOVE ALL LOOSE INORGANIC OR UNSUITABLE SOIL TO UNDISTURBED BEARING STRATA W/ ALLOWABLE SOIL BEARING PRESSURE OF 1500 PSF.
3. CONCRETE STRENGTH SHALL BE 4000 PSI, MIN.
4. SLAB SHALL BE LEVEL ±1/4"
5. SHELTER TIE DOWN DETAIL PROVIDED BY SHELTER MANUFACTURER.
6. SUB-GRADE SHALL BE COMPACTED 95%.
7. FINISH SLAB ELEVATION TO BE 6" ABOVE HIGHEST ADJACENT EXISTING GRADE

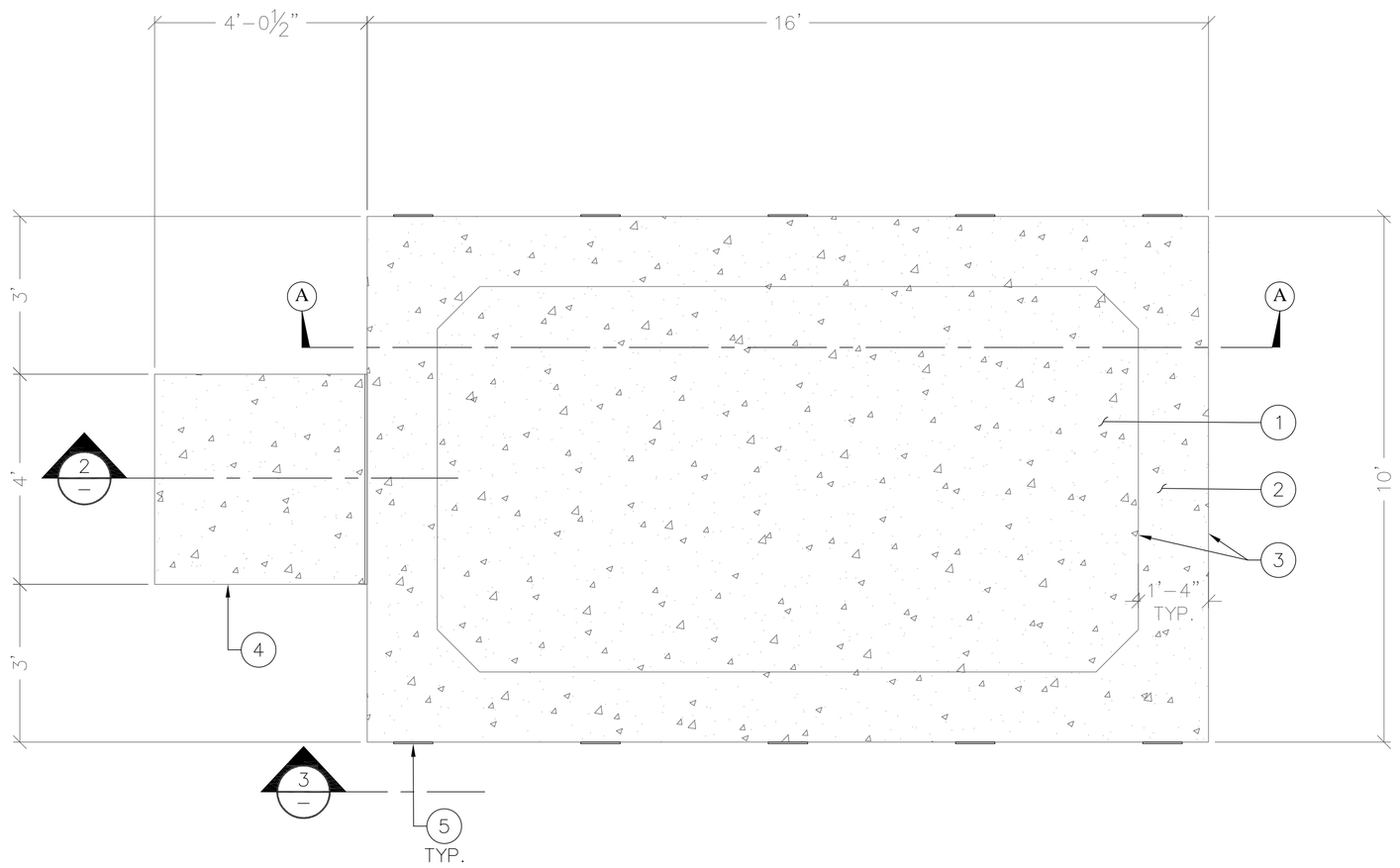

PLAN

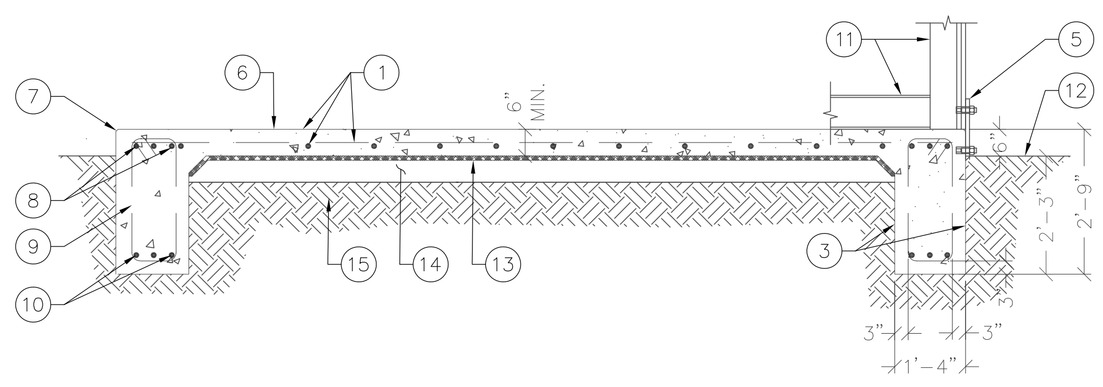

SECTION "A-A"

SHELTER FOUNDATION DETAILS | SCALE: N.T.S. | 1

TYPICAL CONCRETE STOOP KEYED NOTES: (#)

1. SHELTER WALL AND FINISHED FLOOR
2. ½" NEOPRENE FILLER
3. 3" REINFORCEMENT CLEARANCE FROM SLAB PERIMETER
4. ¾" CHAMFER EDGE (TYP.)
5. TRANSITION FINISH GRADE
6. NATURAL SOIL OR BEDROCK
7. 6" THK MIN. CRUSHED STONE OR COMPACTED GRANULAR FILL (SEE NOTE 6), ALSO REFER GEOTECHNICAL REPORT FOR REQUIRED BACKFILL SPECIFICATION
8. 12" SLAB WITH #5 @ 12" O.C. EACH WAY TOP & BOTTOM, SLAB FINISH 6" ABOVE FINISH GRADE

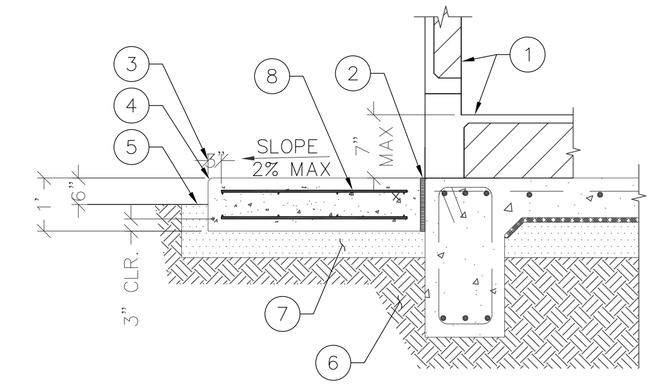

CONCRETE STOOP DETAIL | SCALE: N.T.S. | 2

SHELTER ANCHOR KEYED NOTES: (#)

1. SHELTER
2. ANCHOR BOLT SUPPLIED BY MANUFACTURER (TYP.)
3. STEEL TIE DOWN TRAP PROVIDED BY SHELTER MANUFACTURER (VERIFY W/ SHELTER MANUFACTURER)
4. SHELTER FLOOR
5. FINISH GRAVEL LEVEL
6. CONCRETE TURNDOWN AT PERIMETER

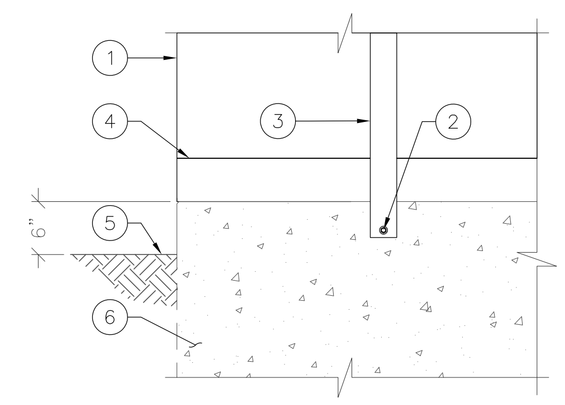

SHELTER ANCHORING DETAIL | SCALE: N.T.S. | 3

NOT USED | SCALE: N.T.S. | 4

Commnet
Connecting Rural America

ABn ENGINEERING
1337 E DESERT FLOWER LANE
PHOENIX, AZ 85048
PHONE: (480) 213-8524

PE SEAL

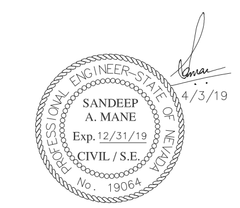

DESIGNER: JASON NGO

LEAD EE: SB

LEAD CE/SE: SAM

SUBMITTALS

REV.	DATE	DESCRIPTION	BY
H	1/25/19	COMMENTS	JN
I	2/13/19	COMMENTS	JN
J	2/18/19	COMMENTS	JN
K	2/19/19	FINAL CD	JN
L	4/3/19	REVISED CD	JN

THE INFORMATION CONTAINED IN THIS SET OF DOCUMENTS IS PROPRIETARY BY NATURE. ANY USE OR DISCLOSURE OTHER THAN THAT WHICH RELATES TO COMMNET WIRELESS IS STRICTLY PROHIBITED.

SITE NAME
VYA, NEVADA

PROJECT
RAW LAND MONOPOLE

SITE ADDRESS
LAT: 41° 35' 30.76358"N
LONG: 119° 52' 47.14752"W
89000A DUGWAY ROAD
GERLACH, NV 89413

SHEET TITLE
SHELTER FOUNDATION DETAILS

SHEET NUMBER
S-1

Copyright © Abn Engineering (AbnE), 2018. This document is a proprietary item of Abn Engineering and contains information solely for use on a specific project. It cannot be used, disclosed or reproduced in any format without AbnE's prior written permission. Only our customer has the right to use the information contained in this document for construction purpose of this project up to 12 months from seal & stamped date on this document. The user agrees to indemnify defend , & hold harmless AbnE from all claims, suits, liability, demands, judgments, or expenses arising from or related to the use or re-use of the electronic files. All rights reserved.

COMPOUND PLAN KEYED NOTES: (#)

1. (E) DIRT ROAD
2. (E) TREE TO BE REMOVED (TYP.)
3. (N) 12' WIDE ACCESS EASEMENT AND (N) 12' WIDE DIRT ACCESS ROAD
4. (N) 7' CHAIN LINK FENCE WITH 12' WIDE DOUBLE ACCESS GATES, SEE DETAIL 3 ON SHEET A-5
5. NOT USED
6. (N) 150' TALL MONOPOLE, SEE STRUCTURAL DRAWINGS BY OTHERS
7. (N) ICE BRIDGE, SEE DETAIL 4 ON SHEET A-5
8. (N) GPS ANTENNA, SEE DETAIL 5 ON SHEET A-5
9. (N) EQUIPMENT SHELTER (PROVIDED BY OTHERS), SEE DETAIL 1 ON SHEET S-1
10. (N) U.G. CONDUIT FOR POWER RUN, SEE DETAIL 4 ON SHEET E-3 AND SINGLE LINE DIAGRAM
11. (N) METER BANK, SEE DETAIL 3 ON SHEET E-3
12. (N) 10' WIDE UTILITY EASEMENT
13. (N) U.G. CONDUIT FOR POWER RUN FROM SOURCE TO METER BANK BY PROVIDER
14. (E) PAD MOUNTED TRANSFORMER. (N) COMMNET POWER SOURCE
15. NOT USED.
16. (N) PROPANE TANK ON INTERLOCK PAVER, SEE DETAILS 2 & 6 ON SHEET A-8
17. LINE OF 10' PROPANE TANK IGNITION SOURCE SPARK RADIUS PER NFPA 58
18. (N) GENERATOR, SEE DETAILS 1, 3 & 5 ON SHEET A-8
19. (N) U.G. CONDUIT FOR GAS LINE RUN, SEE DETAIL 2 ON SHEET E-3
20. (N) U.G. CONDUIT FOR START/STOP AND MONITOR, SEE DETAIL 5 ON SHEET E-3 AND ONLINE DIAGRAM
21. (N) U.G. CONDUIT FOR POWER RUN FROM GENERATOR TO ATS, SEE DETAIL 5 ON SHEET E-3 AND ONLINE DIAGRAM
22. (N) U.G. CONDUIT FOR GENERATOR BATTERY CHARGER FROM PANEL TO GENERATOR, SEE DETAIL 5 ON SHEET E-3 AND ONLINE DIAGRAM
23. (N) DISCONNECT SWITCH
24. (N) 200A ATS

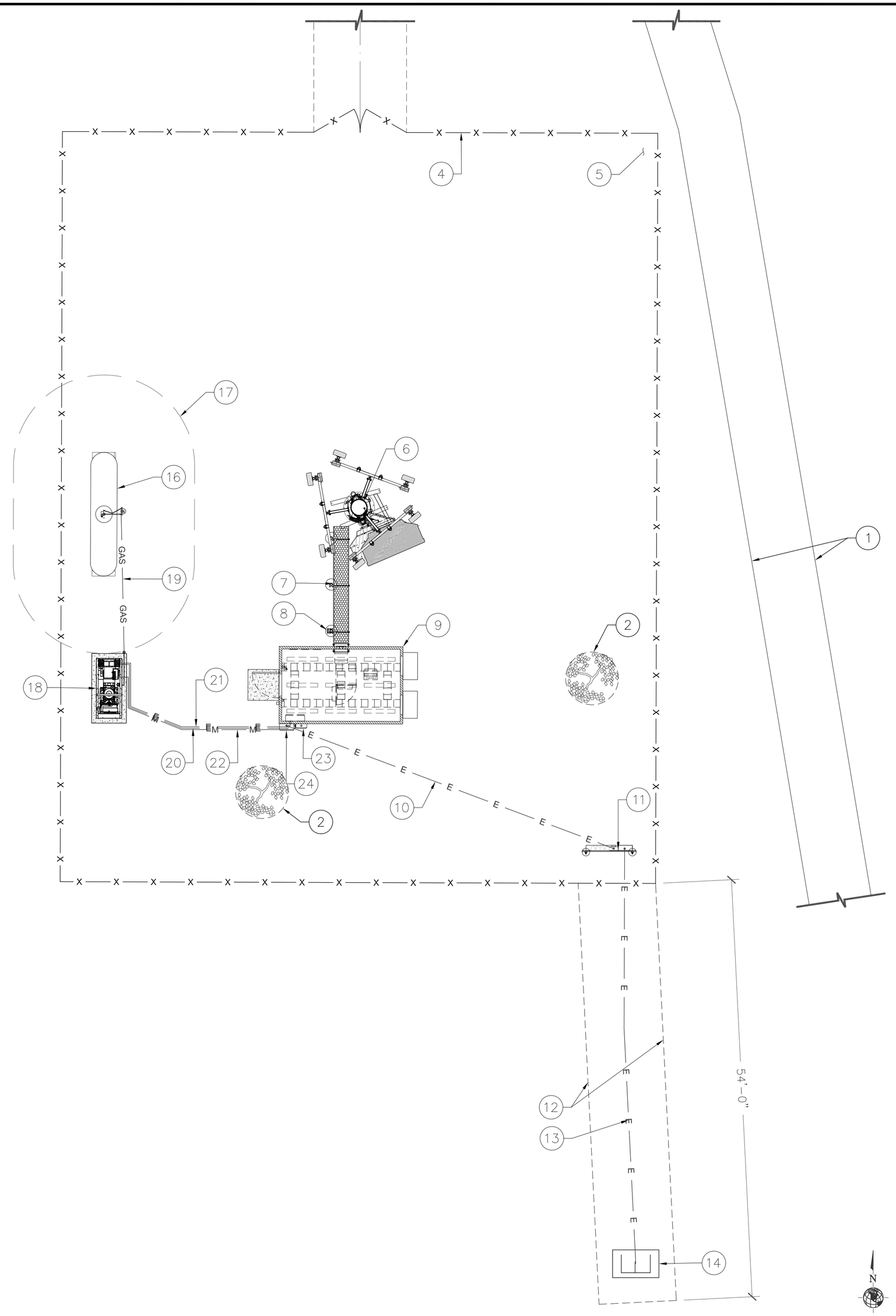

OVERALL ELECTRICAL PLAN

22"x34" SCALE: 1/8" = 1'-0"
11"x17" SCALE: 1/16" = 1'-0"
8' 6' 4' 2' 0' 8'

1

ELECTRICAL GENERAL NOTES:

1. SUBMITTAL OF BID INDICATES CONTRACTOR IS COGNIZANT OF ALL JOB SITE CONDITIONS AND WORK TO BE PERFORMED UNDER THIS CONTRACT. CONTRACTOR IS RESPONSIBLE FOR ALL FIELD VERIFICATION.
2. THESE PLANS ARE DIAGRAMMATIC ONLY, AND ARE NOT TO BE SCALED.
3. ELECTRICAL CONTRACTOR SHALL PROVIDE ALL LABOR, MATERIALS, INSURANCE, EQUIPMENT, INSTALLATION, CONSTRUCTION TOOLS, TRANSPORTATION, ETC. AS REQUIRED FOR A COMPLETE AND PROPERLY OPERABLE SYSTEM ENERGIZED THROUGHOUT AND AS INDICATED ON DRAWINGS, AS SPECIFIED HEREIN AND/OR AS OTHERWISE REQUIRED.
4. ALL MATERIALS AND EQUIPMENT SHALL BE NEW AND IN PERFECT CONDITION WHEN INSTALLED AND SHALL BE OF THE BEST GRADE AND OF THE SAME MANUFACTURER THROUGHOUT FOR EACH CLASS OR GROUP OF EQUIPMENT. MATERIALS SHALL BE LISTED AND APPROVED BY UNDERWRITER'S LABORATORY (UL) AND SHALL BEAR THE INSPECTION LABEL "J" WHERE SUBJECT TO SUCH APPROVAL. MATERIALS SHALL MEET WITH APPROVAL OF THE DIVISION OF INDUSTRIAL SAFETY AND ALL GOVERNING BODIES HAVING JURISDICTION (AHJ). MATERIALS SHALL BE MANUFACTURED IN ACCORDANCE WITH APPLICABLE STANDARDS ESTABLISHED BY ANSI, NEMA, AND NBFU.
5. ALL CONDUIT INSTALLED SHALL BE SURFACE MOUNTED UNLESS OTHERWISE NOTED.
6. ELECTRICAL CONTRACTOR SHALL CARRY OUT HIS WORK IN ACCORDANCE WITH ALL GOVERNING STATE, COUNTY, LOCAL CODES AND O.S.H.A.
7. ELECTRICAL CONTRACTOR SHALL SECURE ALL NECESSARY ELECTRICAL PERMITS, AND PAY ALL REQUIRED FEES.
8. COMPLETE JOB SHALL BE GUARANTEED FOR A PERIOD OF NO LESS THAN ONE YEAR AFTER THE DATE OF JOB COMPLETION. DATE OF JOB COMPLETION SHALL BE THE DATE ON THE CONTRACTOR'S "NOTICE OF COMPLETION" SUBMITTED TO THE OWNER. ANY WORK, MATERIAL, OR EQUIPMENT FOUND TO BE FAULTY DURING THAT PERIOD SHALL BE CORRECTED AT ONCE, UPON WRITTEN NOTIFICATION, AT THE EXPENSE OF THE ELECTRICAL CONTRACTOR.
9. ALL CONDUIT ONLY (C.O.) SHALL HAVE A PULL WIRE OR ROPE, AND TRUE TAPE.
10. ELECTRICAL CONTRACTOR SHALL PROVIDE THE OWNER WITH ONE SET OF COMPLETE ELECTRICAL "AS BUILT" DRAWINGS, SHOWING ACTUAL DIMENSIONS AND CIRCUITS, WITHIN 10 WORKING DAYS OF PROJECT COMPLETION.
11. ALL BROCHURES, OPERATING MANUALS, CATALOGS, SHOP DRAWINGS, ETC. SHALL BE TURNED OVER TO PROJECT MANAGER AT JOB COMPLETION.
12. USE T-TAP CONNECTIONS ON ALL MULTI-CIRCUITS WITH COMMON NEUTRAL CONDUCTOR FOR LIGHTING FIXTURE. ALL CONDUCTORS SHALL BE COPPER.
13. THE EXTERIOR GROUND RING SHALL BE TESTED PER COMMNET WIRELESS SPECIFICATIONS USING A 3-POINT FALL OF POTENTIAL TEST. IF THE GROUNDING SYSTEM RESISTANCE TO EARTH IS GREATER THAN 5 OHMS, THE ELECTRICAL CONTRACTOR SHALL NOTIFY THE RESPONSIBLE ENGINEER.
14. ALL CIRCUIT BREAKERS, FUSES AND ELECTRICAL EQUIPMENT SHALL HAVE AN AMP INTERRUPT RATING (AIC) NOT LESS THAN THE MAXIMUM SHORT CIRCUIT CURRENT TO WHICH THEY MAY BE SUBJECTED, AND A MINIMUM OF 10,000 A.I.C.
15. THE ENTIRE ELECTRICAL INSTALLATION SHALL BE GROUNDED AS REQUIRED BY ALL APPLICABLE CODES.
16. PATCH, REPAIR AND PAINT ANY AREA THAT HAS BEEN DAMAGED IN THE COURSE OF THE ELECTRICAL WORK.
17. IN DRILLING HOLES INTO CONCRETE (WHETHER FOR FASTENING OR ANCHORING PURPOSES OR PENETRATIONS THROUGH THE FLOOR FOR CONDUIT RUNS, PIPE RUNS, ETC.) IT MUST BE CLEARLY UNDERSTOOD THAT TENDONS AND REBARS WILL NOT BE DRILLED INTO, CUT, OR DAMAGED UNDER ANY CIRCUMSTANCES.
18. LOCATION OF TENDONS AND REBARS ARE NOT DEFINITELY KNOWN AND THEREFORE MUST BE SEARCHED FOR BY APPROPRIATE METHODS AND EQUIPMENT VIA X-RAY, OR OTHER DEVICES THAT CAN ACCURATELY LOCATE THE REINFORCING STEEL TENDONS.
19. PENETRATIONS IN FIRE RATED WALLS SHALL BE FIRE STOPPED IN ACCORDANCE WITH APPLICABLE LOCAL BUILDING CODES, USING U.L. RATED MATERIALS.
20. ELECTRICAL CONTRACTOR IS TO COORDINATE WITH UTILITY COMPANY FOR CONNECTION OF TEMPORARY AND PERMANENT POWER TO THE SITE. THE TEMPORARY POWER AND ALL HOOK-UP COSTS SHALL BE PAID BY THE CONTRACTOR.
21. ELECTRICAL CONTRACTOR SHALL SUBMIT SHOP DRAWINGS AND/OR CATALOG CUT-SHEETS ON ALL NON-SPECIFIED ORIGINAL MATERIALS AND EQUIPMENT, TO PROJECT MANAGER PRIOR TO COMMENCEMENT OF THE WORK.
22. ALL GROUNDING SYSTEM LEADS SHALL BE TESTED FOR CONTINUITY WITH THE GROUND LOOP CONDUCTOR. ALL FAULTY CONNECTIONS OR CONDUCTORS SHALL BE REPAIRED OR REPLACED AS REQUIRED.
23. CLEAN PREMISES DAILY OF ALL DEBRIS RESULTING FROM WORK AND LEAVE WORK PREMISES IN A COMPLETE AND UNDAMAGED CONDITION.
24. ALL EXTERIOR WALL PENETRATIONS SHALL BE SEALED WITH POLYSEAM SEALANT.
25. ALL #2 TINNED BARE COPPER DOWNLEADS TO BE PROTECTED BY ½" P.V.C. PIPE AND SECURED.
26. COMPRESSION FITTINGS TO BE USED ON ALL CONDUITS (NO SETSCREWS).
27. ALL #6 STRANDED COPPER WITH GREEN INSULATION TO BE ATTACHED WITH CRIMPED DOUBLE LUG, ATTACHED WITH NUTS, BOLTS AND STAR WASHERS TYPICAL AND NO-OX GREASE BETWEEN LUG AND BUSS BAR.
28. ALL ABOVE GROUND CONDUIT SHALL BE SCHEDULE 80 PVC WITH UV PROTECTION OR GRC.

ELECTRICAL NOTES

SCALE: NTS

2

Commnet
Connecting Rural America

ABn ENGINEERING
1337 E DESERT FLOWER LANE
PHOENIX, AZ 85048
PHONE: (480) 213-8524

PE SEAL

PROFESSIONAL ENGINEER, STATE OF NEVADA
DAVID W. DAY
Exp. 12/31/20
ELECTRICAL
No. 8126

4-4-19

DESIGNER: JASON NGO

LEAD EE: SB

LEAD CE/SE: SAM

SUBMITTALS

REV.	DATE	DESCRIPTION	BY
H	1/25/19	COMMENTS	JN
I	2/13/19	COMMENTS	JN
J	2/18/19	COMMENTS	JN
K	2/19/19	FINAL CD	JN
L	4/3/19	REVISED CD	JN

THE INFORMATION CONTAINED IN THIS SET OF DOCUMENTS IS PROPRIETARY BY NATURE. ANY USE OR DISCLOSURE OTHER THAN THAT WHICH RELATES TO COMMNET WIRELESS IS STRICTLY PROHIBITED.

SITE NAME
VYA, NEVADA

PROJECT
RAW LAND MONOPOLE

SITE ADDRESS
LAT: 41° 35' 30.76358"N
LONG: 119° 52' 47.14752"W
89000A DUGWAY ROAD
GERLACH, NV 89413

SHEET TITLE
OVERALL ELECTRICAL PLAN & ELECTRICAL NOTES

SHEET NUMBER
E-1

Copyright ©Abn Engineering (AbnE), 2018. This document is a proprietary item of Abn Engineering and contains information solely for use on a specific project. It cannot be used, disclosed or reproduced in any format without AbnE's prior written permission. Only our customer has the right to use the information contained in this document for construction purpose of this project up to 12 months from seal & stamped date on this document. The user agrees to indemnify defend , & hold harmless AbnE from all claims, suits, liability, demands, judgments, or expenses arising from or related to the use or re-use of the electronic files. All rights reserved.

WSUP19-0003
EXHIBIT E

PANEL SCHEDULE "A"

VOLTAGE: 240 / 120 VOLTS
MOUNTING: SURFACE
ENCLOSURE: NEMA 3R
PHASE: 1
WIRE: 3
BUSS RATING (AMPS): 200
MAIN BREAKER: 200
SHORT CIRCUIT RATING: 10,000 AMPS (RMS-SYM)
REMARKS:

CIRCUIT BREAKER No.	AMPS	POLE	MOD.	CIRCUIT NAME	FEEDER C	FEEDER WIRE	FEEDER GRD	CKT. LOAD DEMAND FACTOR	CKT. LOAD WATTS	LOAD/PHASE (VA) ØA	LOAD/PHASE (VA) ØB	CKT. LOAD WATTS	CKT. LOAD DEMAND FACTOR	FEEDER GRD	FEEDER WIRE	FEEDER C	CIRCUIT NAME	CIRCUIT BREAKER MOD.	POLE	AMPS	No.
1	40	2	–	RECTIFIER RACK	1"	#8	#8	1.00	3,720	7,680		3,960	1.25	#8	#6	1"	HVAC #1	–	2	60	2
3	–	–	–	–	–	#8	–	1.00	3,720		7,680	3,960	1.25	–	#6	–		–	–	–	4
5	40	2	–	FIRSTNET CABINET	1"	#8	#8	1.00	3,720	7,680		3,960	1.00	#8	#6	1"	HVAC #2	–	2	60	6
7	–	–	–	–	–	#8	–	1.00	3,720		7,680	3,960	1.00	–	#6	–		–	–	–	8
9			–	SPACE						400		400	1.25	#12	#12	1"	EQUIPMENT ROOM LIGHTS	–	1	20	10
11			–	SPACE							150	150	1.25	#12	#12	1"	EXTERIOR LIGHT	–	1	20	12
13			–	SPACE						900		900	1.00	#12	#12	1"	RECEPTACLES	–	1	20	14
15			–	SPACE							720	720	1.00	#12	#12	1"	RECEPTACLES	–	1	20	16
17			–	SPACE						180		180	1.00	#12	#12	1"	GFCI RECEPTACLES	–	1	20	18
19			–	SPACE							2000	2000	1.00	#12	#10	1"	GENERATOR POWER	–	1	30	20
21			–	SPACE						0							SPACE	–			22
23			–	SPACE							0						SPACE	–			24
25			–	SPACE						0							SPACE	–			26
27			–	SPACE							0						SPACE	–			28
29			–	SPACE						0							SPACE	–			30

NOTES:

1. ALL INSULATION ON CONDUCTORS TO BE THHN UNLESS NOTED OTHERWISE. INSULATION ON ALL UNDERGROUND EXTERIOR CONDUCTORS SHALL BE THHW.
2. LOAD DEMANDS CALCULATED AS PER SECTIONS 210 & 220 OF THE NATIONAL ELECTRICAL CODE.
3. PANEL COVER SHALL BE FIELD MARKED FOR FLASH PROTECTION WITH A PERMANENT LABEL AS REQUIRED BY THE NATIONAL ELECTRICAL CODE SECTION 110. LABEL SHALL READ: "DANGER: POTENTIAL ARC FLASH HAZARD"
4. ABBREVIATIONS: CO-CONVENIENCE OUTLET, RR-RESTROOM, (N)ORTH, (S)OUTH, (E)AST, (W)EST.

*. WIRE AND CONDUIT SIZE PER SHELTER MANUFACTURER SPECS.

ØA	ØB	TOTALS	
16,840	18,230	35,070	CONNECTED LOAD (VA)
		146	CONNECTED LOAD (A)
1,090	1,028	2,118	DEMAND FACTOR ADJUSTMENTS (VA)
17,930	19,258	37,188	TOTAL LOAD (VA)
149	160		TOTAL LOAD (A)
		155	MAXIMUM LOAD (A)
48%	52%		PHASE BALANCE

NOTE: ALL CONDUCTORS AND CONDUIT PROVIDED AND INSTALLED BY G.C.

ILC PANEL SCHEDULE 'A'

SCALE: N.T.S. **1**

FAULT CURRENT CALCULATION TABLE

MAIN UTILITY COMPANY TRANSFORMER	TRANSFORMER KVA	AFC AT UTILITY
1Ø 120/240V –200A	50	13,889 A

CONFIGURATION FROM	TO	LENGTH	AVAILABLE FAULT CURRENT	FEEDER FEEDER SIZE	FEEDERS PER PHASE	WIRE CONSTANT	SYSTEM LINE TO LINE VOLTS	XFMR SECONDARY VOLTS	PHASE	KVA	%Z	MOTOR LOAD	FAULT CURRENT AT EQUIPMENT	FULL OR SERIES RATED	MINIMUM SYMMETRICAL EQUIPMENT AIC RATING
TRANSFORMER	600A TERM. BOX	60'–0"	13,889 AIC	350 CU	2	22,737	240 V		1Ø		–	0HP	12,042 AIC	FULL	22,000 AIC
METER	200A DISCONNECT	50'–0"	12,042 AIC	3/0 CU	1	12,844	240 V		1Ø		–	0HP	8,658 AIC	FULL	10,000 AIC

NOTE: DISTANCES INDICATED ARE FOR FAULT–CURRENT ANALYSIS ONLY. CONTRACTOR SHALL USE FIELD MEASUREMENTS ESTABLISH CONDUCTOR LENGTHS FOR ORDERING PURPOSES. CALCULATIONS ARE BASED ON A 50KVA TRANSFORMER AND (2) RUNS 350mcm CU FROM TRANSFORMER TO METERBANK. PLEASE CONTACT ENGINEER IF SIZE IS DIFFERENT.

FAULT CURRENT CALCULATIONS

SCALE: N.T.S. **3**

COPPER FEEDER SCHEDULE

TYPE	CONDUIT SIZE PVC	CONDUIT SIZE EMT	CONDUCTORS QUAN.	CONDUCTORS SIZE	75°C AMP RATING	TYPE	CONDUIT SIZE PVC	CONDUIT SIZE EMT	CONDUCTORS QUAN.	CONDUCTORS SIZE	75°C AMP RATING	TYPE	CONDUIT SIZE PVC	CONDUIT SIZE EMT	CONDUCTORS QUAN.	CONDUCTORS SIZE	75°C AMP RATING
38	3/4"	3/4"	3	#8	50	33X	2"	2"	3	3/0	200	350	3"	2–1/2"	3	500 KCMIL	380
33	1"	1"	3	#3	100	34X	2"	2"	3	4/0	230	360	3–1/2"	3–1/2"	3	600 KCMIL	420
32	1–1/4"	1–1/4"	3	#2	115	325	2"	2"	3	250 KCMIL	255						
31	1–1/4"	1–1/4"	3	#1	130	330	2–1/2"	2–1/2"	3	300 KCMIL	285						
31X	1–1/2"	1–1/2"	3	1/0	150	335	2–1/2"	2–1/2"	3	350 KCMIL	310						
32X	1–1/2"	1–1/2"	3	2/0	175	340	2–1/2"	2–1/2"	3	400 KCMIL	335						

NOTE:
1. SEE EQUIPMENT GROUND CONDUCTOR SCHEDULES OR SERVICE GROUNDING DETAIL FOR GROUND CONDUCTORS RATING.
2. ALL INSULATION SHALL BE THHN UNLESS NOTED OTHERWISE.
3. PVC CONDUIT SIZE IS BASED ON SCHEDULE 40 PVC. PVC IS APPROVED FOR UNDERGROUND FEEDERS ONLY.

EQUIPMENT GROUNDING CONDUCTORS SCHEDULE

OVERCURRENT DEVICE	COPPER
15	14
20	12
30	10
40	10
60	10
100	8
200	6
300	4
400	3
500	2
600	1
800	1/0

ALL CONDUCTORS SHALL BE COPPER WITH
(THHN)–INSULATION ABOVE GROUND IN CONDUIT
(THWN)–IN CONDUIT BELOW GRADE
(USE)–DIRECT BURIAL
(RHH–RHW)– INDOORS OPEN RACEWAY

NOTES:
1. ALL EQUIPMENT SHOWN IS NEW UNLESS OTHERWISE NOTED.
2. CONTRACTOR TO INSTALL AC DISCONNECT AT SHELTER FOR EACH HVAC UNIT.

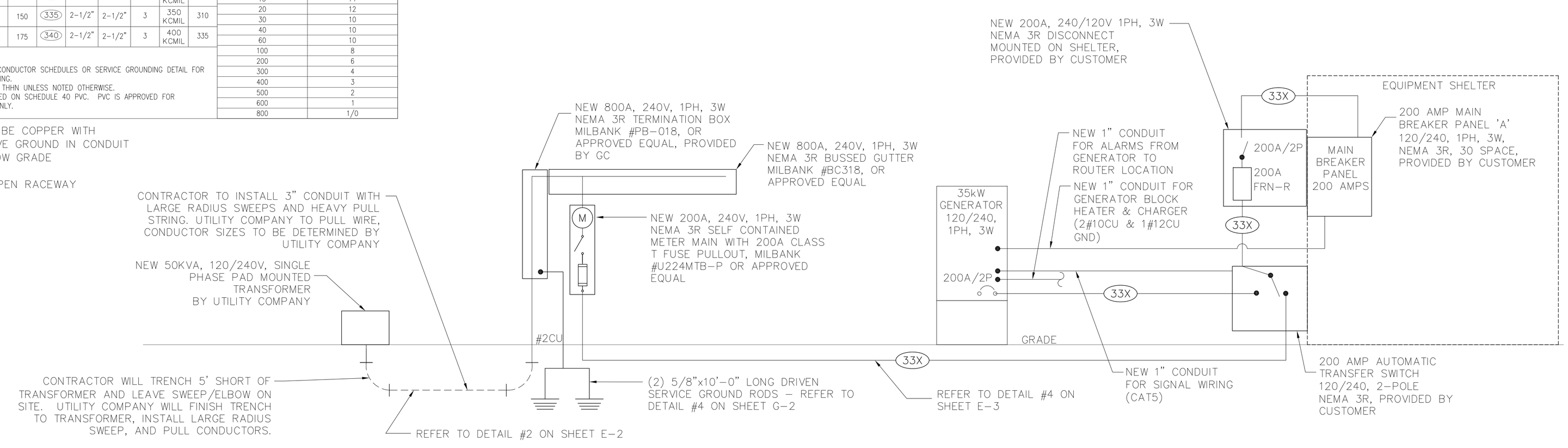

ONE-LINE DIAGRAM

SCALE: N.T.S. **2**

Commnet
Connecting Rural America

ABn ENGINEERING
1337 E DESERT FLOWER LANE
PHOENIX, AZ 85048
PHONE: (480) 213–8524

PE SEAL

4–4–19

DESIGNER: JASON NGO
LEAD EE: SB
LEAD CE/SE: SAM

SUBMITTALS

REV.	DATE	DESCRIPTION	BY
H	1/25/19	COMMENTS	JN
I	2/13/19	COMMENTS	JN
J	2/18/19	COMMENTS	JN
K	2/19/19	FINAL CD	JN
L	4/3/19	REVISED CD	JN

THE INFORMATION CONTAINED IN THIS SET OF DOCUMENTS IS PROPRIETARY BY NATURE. ANY USE OR DISCLOSURE OTHER THAN THAT WHICH RELATES TO COMMNET WIRELESS IS STRICTLY PROHIBITED.

SITE NAME
VYA, NEVADA

PROJECT
RAW LAND MONOPOLE

SITE ADDRESS
LAT: 41° 35' 30.76358"N
LONG: 119° 52' 47.14752"W
89000A DUGWAY ROAD
GERLACH, NV 89413

SHEET TITLE
PANEL SCHEDULE & ONE LINE DIAGRAM

SHEET NUMBER
E–2

Copyright ©Abn Engineering (AbnE), 2018. This document is a proprietary item of Abn Engineering and contains information solely for use on a specific project. It cannot be used, disclosed or reproduced in any format without AbnE's prior written permission. Only our customer has the right to use the information contained in this document for construction purpose of this project up to 12 months from seal & stamped date on this document. The user agrees to indemnify defend , & hold harmless AbnE from all claims, suits, liability, demands, judgments, or expenses arising from or related to the use or re-use of the electronic files. All rights reserved.

WSUP19-0003
EXHIBIT E

Copyright ©Abn Engineering (AbnE), 2018. This document is a proprietary item of Abn Engineering and contains information solely for use on a specific project. It cannot be used, disclosed or reproduced in any format without AbnE's prior written permission. Only our customer has the right to use the information contained in this document for construction purpose of this project up to 12 months from seal & stamped date on this document. The user agrees to indemnify defend , & hold harmless AbnE from all claims, suits, liability, demands, judgments, or expenses arising from or related to the use or re-use of the electronic files. All rights reserved.

H–FRAME POST KEYED NOTES:

1. PIPE CAP 3½" (TYP.)
2. 1⅝"x1⅝"x12 GAUGE GALV. CHANNEL (TYP.)
3. UNISTRUT P–1119 GALV. SUPPORT PIPE CLAMP (TYP.)
4. H–FRAME DIRECT BURIAL 3½" PIPE COLUMN (TYP.)
5. MECHANICAL GROUND BONDING (TYPE YA–2) (TYP.)
6. RIGID CONDUIT(S)
7. ROUND TOP OF FOUNDATION
8. EXOTHERMIC WELD (TYPE PT) (TYP.)
9. GROUND RING
10. #2 AWG SOLID TINNED BARE COPPER CONDUCTOR ROUTED IN FLEXIBLE NON–METALLIC LIQUID TIGHT CONDUIT (CARFLEX) (TYP.)
11. EXOTHERMIC WELD (TYPE VS)
12. GFI USE DUPLEX RECEPTACLE W/ ENCLOSURE
13. METER GANG – MILBANK #U224MTB–P 4–JAW / TERMINAL, OR APPROVED EQUAL
14. 200A, 240V, DISCONNECT SWITCH, NEMA 3R
15. 200A AC PANEL "A", NEMA 3R
16. CONCRETE FOUNDATION, 2500 PSI
17. FINISHED GRADE OR ASPHALT
18. NATURAL SOIL
19. BUSSED GUTTER – MILBANK #BC318, OR APPROVED EQUAL
20. TERMINATION BOX – MILBANK #PB–018, OR APPROVED EQUAL

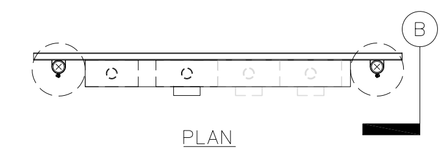

PLAN

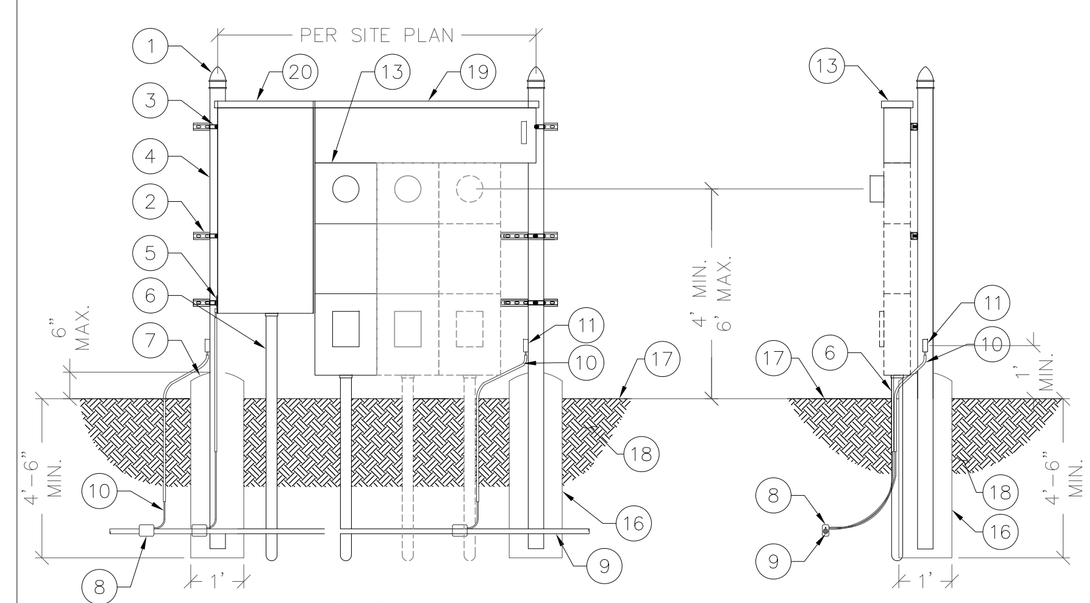

FRONT

SECTION B

H–FRAME SUPPORT PIPE NOTES:

1. 3" RGS (RIGID GALVANIZED STEEL) CONDUIT SHALL BE A MAXIMUM LENGTH OF 10 FEET.
2. THE 3" RGS CONDUIT SHALL BE PLACED IN THE CENTER OF A 12" MINIMUM DIAMETER CONCRETE FOOTING. THE FOOTING SHALL BE A MINIMUM OF 36" IN THE GROUND AND EXTEND A MINIMUM OF 4" ABOVE GROUND LEVEL AND HAVE A 1/2" SLOPE AWAY FORM THE CONDUIT TO ALLOW FOR DRAINAGE

NOT USED

SCALE: N.T.S. **1**

TYPICAL H-FRAME DETAILS

SCALE: N.T.S. **3**

HIGH VOLTAGE TRENCH KEYED NOTES: (#)

1. MATCH EXISTING SURFACE
2. FINISHED GRADE
3. VERT. DEPTH W/O SHORING PER GOVERNING CODES
4. CLEAR BEDDING W/ MIN. 12" COVERAGE OVER CONDUIT
5. MINIMUM 1–1/2" PVC CONDUIT FOR GAS LINE, VERIFY WITH PROPANE GAS PROVIDER.
6. FILL MATERIAL
7. WARNING TAPE 12" BELOW GRADE

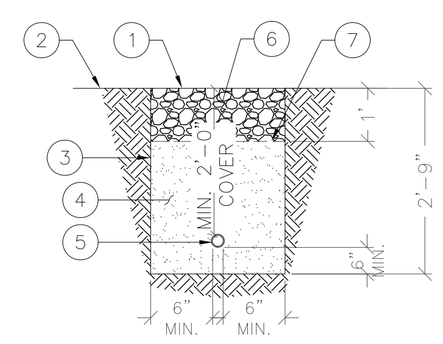

NOTE:
THIS DETAIL NOT APPLICABLE TO WATER LINE(S)

NOT USED

FUEL LINE TRENCH DETAIL

SCALE: N.T.S. **2**

HIGH VOLTAGE TRENCH KEYED NOTES: (#)

1. MATCH EXISTING SURFACE
2. FINISHED GRADE
3. VERT. DEPTH W/O SHORING PER GOVERNING CODES
4. CLEAR BEDDING W/ MIN. 12" COVERAGE OVER CONDUIT
5. CONDUIT PER SINGLE LINE DIAGRAM, HIGH VOLTAGE POWER CONDUIT WITH PULL STRING, SIZED PER ELECTRICAL ENGINEER; 12" SEPARATION FROM OTHER LINES; CONDUIT W/ GAS & FUEL LINES IN SEPARATE TRENCH; COORDINATE W/ LOCAL UTILITIES
6. FILL MATERIAL
7. WARNING TAPE 12" BELOW GRADE

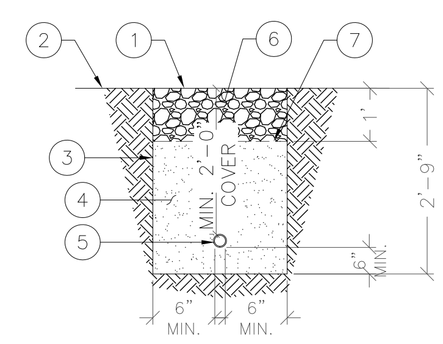

NOTE:
THIS DETAIL NOT APPLICABLE TO WATER LINE(S)

POWER TRENCH DETAIL

SCALE: N.T.S. **4**

TRENCH KEYED NOTES: (#)

1. MATCH EXISTING SURFACE
2. FINISHED GRADE
3. VERT. DEPTH W/O SHORING PER GOVERNING CODES
4. CLEAR BEDDING W/ MIN. 12" COVERAGE OVER CONDUIT
5. PVC/CONDUIT SIGNAL WIRING OR GENERATOR BLOCK HEATER & CHARGER, SEE SINGLE LINE DIAGRAM.
6. PVC PER SINGLE LINE DIAGRAM, FOR ALARM OR POWER
7. WARNING TAPE 12" ABOVE CONDUIT
8. BACK FILL

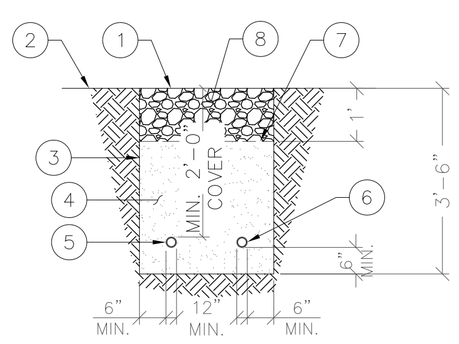

GENERATOR TRENCH DETAIL

SCALE: N.T.S. **5**

Commnet
Connecting Rural America

ABn ENGINEERING
1337 E DESERT FLOWER LANE
PHOENIX, AZ 85048
PHONE: (480) 213–8524

PE SEAL

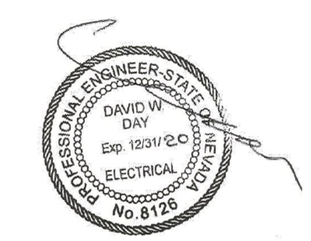

4–4–19

DESIGNER:	JASON NGO
LEAD EE:	SB
LEAD CE/SE:	SAM

SUBMITTALS

REV.	DATE	DESCRIPTION	BY
H	1/25/19	COMMENTS	JN
I	2/13/19	COMMENTS	JN
J	2/18/19	COMMENTS	JN
K	2/19/19	FINAL CD	JN
L	4/3/19	REVISED CD	JN

THE INFORMATION CONTAINED IN THIS SET OF DOCUMENTS IS PROPRIETARY BY NATURE. ANY USE OR DISCLOSURE OTHER THAN THAT WHICH RELATES TO COMMNET WIRELESS IS STRICTLY PROHIBITED.

SITE NAME
VYA, NEVADA

PROJECT
RAW LAND MONOPOLE

SITE ADDRESS
LAT: 41° 35' 30.76358"N
LONG: 119° 52' 47.14752"W
89000A DUGWAY ROAD
GERLACH, NV 89413

SHEET TITLE
DETAILS

SHEET NUMBER
E–3

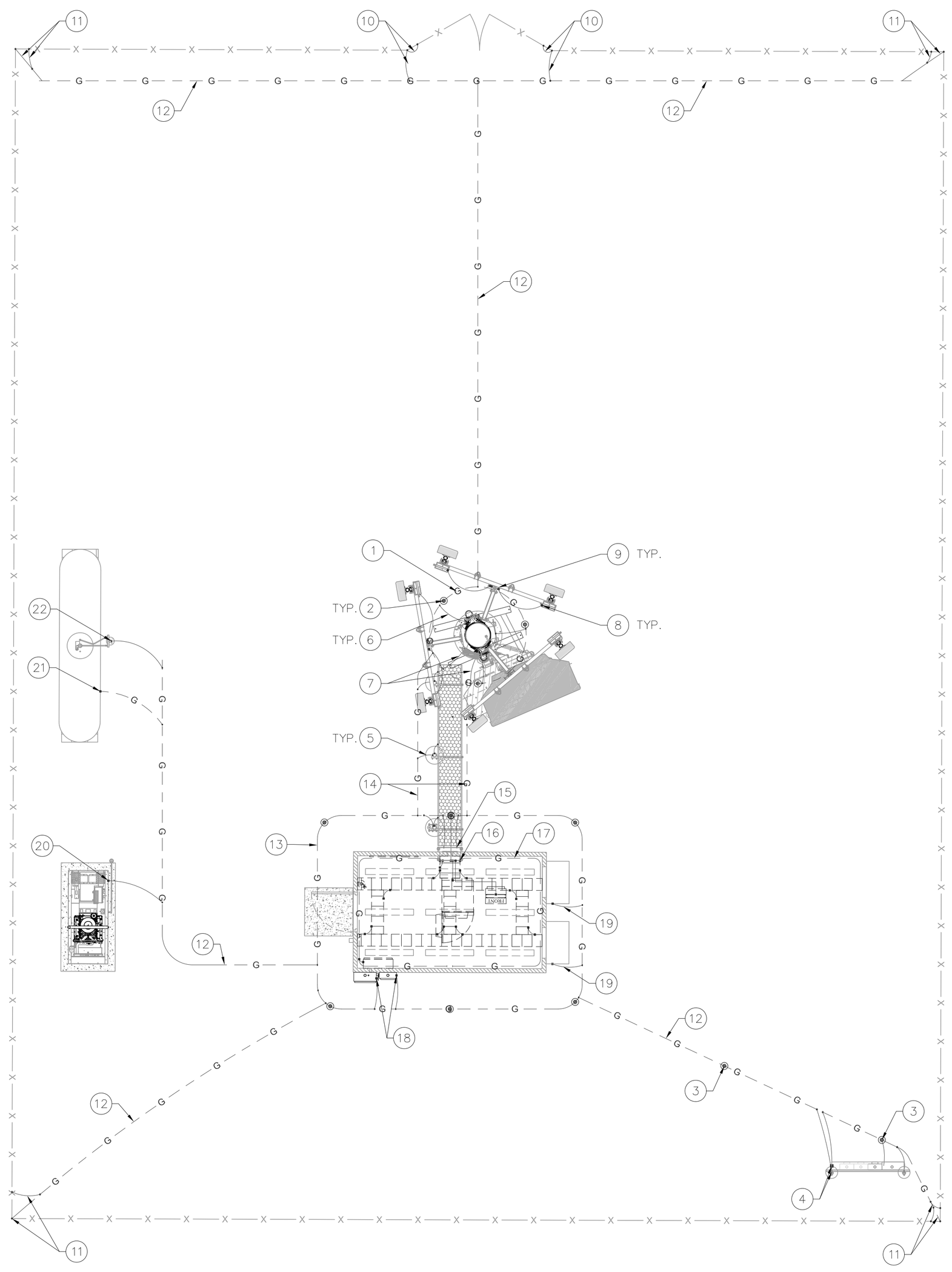

LEGEND:

⊢TGB⊣	TINNED SOLID ALLOY 110 COPPER POLE BUSS BAR BONDED TO POLE STEEL.
◉	5/8" DIA. x 10' COPPER CLAD GROUND ROD. REFER TO DETAIL 7 ON SHEET G-2.
— —G— —	GROUND RING, REFER TO DETAIL 6 ON SHEET G-2.
•	EXOTHERMIC WELD OR IRREVERSIBLE HIGH-COMPRESSION CRIMP.
■	MECHANICAL CONNECTION.

GENERAL NOTES:

A. THESE DRAWINGS REPRESENT THE GENERAL EXTENT AND ARRANGEMENT OF SYSTEMS, BUT ARE NOT TO BE CONSIDERED FABRICATION DRAWINGS. COORDINATE WITH OTHER TRADES, AND PROVIDE EACH SYSTEM COMPLETE, INCLUDING ALL NECESSARY COMPONENTS, FITTINGS AND OFFSETS.

B. INSTALL SYSTEMS SUCH THAT REQUIRED CLEARANCE AND SERVICE ACCESS SPACE IS PROVIDED AROUND ALL MECHANICAL AND ELECTRICAL EQUIPMENT, AND AROUND ANY COMPONENTS WHICH REQUIRE SERVICE ACCESS.

C. PROVIDE SUPPLEMENTARY STEEL AS REQUIRED FOR THE PROPER SUPPORT OF ALL SYSTEMS.

D. REFER TO G-2 FOR GROUNDING DETAILS.

E. ALL METALLIC SURFACES SHALL BE PREPARED PRIOR TO BONDING, COLD GALV. SPRAY SHALL BE USED ON ANY EXOTHERMIC WELD TO PREVENT CORROSION, ANY AREA TO BE COLD GALV. SPRAY SHALL BE TAPED OFF PRIOR TO APPLICATION.

CONSTRUCTION KEYED NOTES: (#)

1. GROUNDING ELECTRODE CONDUCTOR SYSTEM (GROUND RING), #2 AWG SOLID BARE TINNED COPPER CONDUCTOR. GROUNDING ELECTRODE CONDUCTOR SHALL BE BURIED 30" BELOW GRADE WHERE APPLICABLE. ABOVE GRADE GROUNDING ELECTRODE CONDUCTOR TO BE ROUTED IN FLEXIBLE NON-METALLIC LIQUID TIGHT CONDUIT & FASTENED TO CONCRETE SURFACE EVERY 3' MAX. FASTENERS SHALL BE FLEXIBLE CONDUIT HALF STRAPS W/ 1/4"ø x 2" (L) RED HEAD HAMMER-SET NAIL DRIVE ANCHOR OR EQUIV. (TYP.)
2. 5/8" DIA. x 10' LONG COPPER CLAD GROUND ROD PLACED MINIMUM EVERY 10' APART (TYP.). REFER TO DETAIL 4 ON SHEET G-2.
3. SERVICE 5/8" DIA. x 10' LONG COPPER CLAD GROUND ROD PLACED MINIMUM EVERY 10' APART (TYP. OF 2). REFER TO DETAIL 4 ON SHEET G-2.
4. BOND H-FRAME & ELECTRICAL BOX TO GROUND RADIAL (TYP.), REFER TO DETAIL 3 ON SHEET E-2.
5. BOND ICE BRIDGE POST TO POLE GROUND RING (TYP.).
6. BOND POLE BASE PLATE (AT MANUFACTURER INSTALLED BONDING TAB) TO GROUND RING. UNDER NO CIRCUMSTANCES WILL EXOTHERMIC WELDING BE PERMITTED ON THE POLE TRUNK, TYPICAL 3 LOCATIONS.
7. BOND POLE GROUND BUSS BAR TO POLE GROUND RING WITH #2 AWG, TYP. OF 2 CONNECTIONS
8. BOND RRHs TO ANTENNA GROUND BUS BAR WITH #6 AWG (TYP.)
9. ATTACHED ANTENNA GROUND BUS BAR SECTOR GATE (TYP.)
10. BOND GATE TO GATE POST VIA #2 GATE BOND JUMPER (TYP.). REFER TO DETAIL 5 ON SHEET G-2
11. BOND TO FENCE FABRIC SUPPORT POST. REFER TO DETAIL 5 ON SHEET G-2 (TYP.)
12. #2 AWG SOLID BARE TINNED COPPER CONDUCTOR (TYP.)
13. #2 AWG SOLID BARE TINNED COPPER EQUIPMENT SHELTER GROUND RING
14. EQUIPMENT SHELTER GROUND RING TO POLE GROUND RING WITH #2 AWG (TYP. OF 2 CONNECTIONS)
15. EXTERIOR GROUND BUS BAR (EGB). BOND TO GROUND RING WITH (2) #2 AWG SOLID TINNED BARE COPPER CONDUCTORS. IN ADDITION, BOND ENTRY PANEL TO EGB WITH #2 AWG THHN COPPER CONDUCTOR PER SHELTER MANUFACTURER SPECIFICATIONS (TYP.)
16. MAIN GROUND BUS BAR (MGB) INSTALLED BY SHELTER MANUFACTURER
17. INTERIOR GROUNDING HALO SUPPLIED AND INSTALLED BY GC
18. BOND ATS & DISCONNECT TO GROUND RING WITH #2 AWG SOLID TINNED BARE COPPER CONDUCTOR
19. SHELTER A/C UNIT. BOND TO GROUND RING WITH #2 AWG SOLID TINNED BARE COPPER CONDUCTOR. BONDING ON THE SHELTER A/C UNIT HOUSING SHALL BE MECHANICAL ONLY (TYP.).
20. BOND GENERATOR TO GROUND RADIAL WITH #2 AWG
21. BOND PROPANE TANK LEG TO GROUND RADIAL WITH #2 AWG
22. BOND SUPPORT PIPE TO GROUND RADIAL WITH #2 AWG

GROUNDING PLAN

22"x34" SCALE: 3/16" = 1'-0"
11"x17" SCALE: 3/32" = 1'-0"
4' 2' 0" 4'

Commnet
Connecting Rural America

ABn ENGINEERING
1337 E DESERT FLOWER LANE
PHOENIX, AZ 85048
PHONE: (480) 213-8524

PE SEAL

4-4-19

DESIGNER:	JASON NGO
LEAD EE:	SB
LEAD CE/SE:	SAM

SUBMITTALS

REV.	DATE	DESCRIPTION	BY
H	1/25/19	COMMENTS	JN
I	2/13/19	COMMENTS	JN
J	2/18/19	COMMENTS	JN
K	2/19/19	FINAL CD	JN
L	4/3/19	REVISED CD	JN

THE INFORMATION CONTAINED IN THIS SET OF DOCUMENTS IS PROPRIETARY BY NATURE. ANY USE OR DISCLOSURE OTHER THAN THAT WHICH RELATES TO COMMNET WIRELESS IS STRICTLY PROHIBITED.

SITE NAME
VYA, NEVADA

PROJECT
RAW LAND MONOPOLE

SITE ADDRESS
LAT: 41° 35' 30.76358"N
LONG: 119° 52' 47.14752"W
89000A DUGWAY ROAD
GERLACH, NV 89413

SHEET TITLE
GROUNDING PLAN

SHEET NUMBER
G-1

Copyright ©Abn Engineering (AbnE), 2018. This document is a proprietary item of Abn Engineering and contains information solely for use on a specific project. It cannot be used, disclosed or reproduced in any format without AbnE's prior written permission. Only our customer has the right to use the information contained in this document for construction purpose of this project up to 12 months from seal & stamped date on this document. The user agrees to indemnify defend , & hold harmless AbnE from all claims, suits, liability, demands, judgments, or expenses arising from or related to the use or re-use of the electronic files. All rights reserved.

WSUP19-0003
EXHIBIT E

NOTE:
ERICO CADWELD "MOLD TYPES" SHOWN HERE ARE EXAMPLES. CONSULT WITH PROJECT MANAGER OR CONSTRUCTION MANAGER FOR SPECIFIC MOLDS TO BE USED FOR THIS PROJECT.

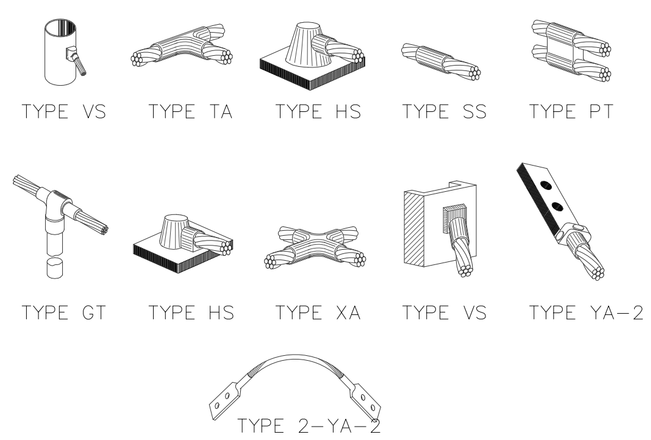

EXOTHERMIC WELD DETAILS — SCALE: N.T.S. — 1

GROUNDING CONDUCTOR SIZING	
CONDUCTOR LENGTH IN LINEAR FT	CONDUCTOR SIZE IN AWG/MCM
< 33	2
34 – 41	1
42 – 53	1/0
54 – 66	2/0
67 – 84	3/0
85 – 105	4/0
106 – 125	250 MCM
126 – 150	300 MCM
151 – 175	350 MCM
176 – 250	500 MCM
251 –300	600 MCM
> 300	750 MCM

GRND. CONDUCTOR SIZE DETAIL — SCALE: N.T.S. — 2

GROUND RING TRENCHING KEYED NOTES: (#)

1. BACKFILL PER SPECIFICATIONS
2. FINISHED GRADE
3. #2 AWG SOLID TINNED BARE COPPER WIRE

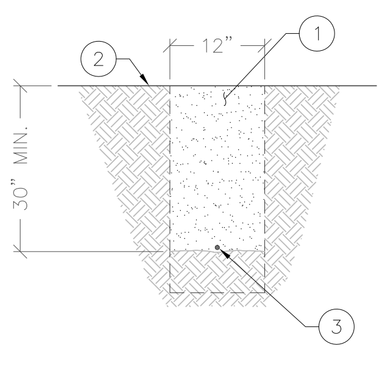

NOTES:

1. DEPTH TO BE 30" OR 6" BELOW FROST LINE, WHICHEVER IS GREATER.
2. GROUND RINGS SHOULD CONSIST OF AT LEAST 20' OF #2 AWG OR LARGER BARE COPPER CONDUCTOR.
3. BURY THE RINGS IN DIRECT CONTACT WITH SOIL.

GROUND RING TRENCH — SCALE: N.T.S. — 3

GROUND ROD INSTALLATION KEYED NOTES: (#)

1. FINISHED GRADE
2. EXOTHERMIC CONNECTION (TYPE GT)
3. 5/8"øx10' LONG COPPER CLAD GROUND ROD WITH EXOTHERMIC CONNECTION TO GROUND RING
4. #2 AWG SOLID TINNED BARE COPPER WIRE (GROUND RING 30" BELOW GRADE)
5. EXOTHERMIC CONNECTION TO GROUND RING (TYPE PT)
6. #8CU AWG SOLID TINNED BARE COPPER WIRE GROUND CONDUCTOR ROUTED IN FLEXIBLE NON-METALLIC LIQUID TIGHT CONDUIT (CARFLEX)
7. #8CU AWG COPPER MAIN EQUIPMENT BONDING JUMPER
8. #8CU AWG COPPER MAIN BONDING JUMPER
9. TERMINATION BOX

NOTES:

1. ALL GROUNDING AND BONDING AT THE SERVICE ENTRANCE SHALL COMPLY WITH NEC 250.28, 250.50, 250.66, 250.92, 250.102(C) & 250.56
2. GROUNDING SYSTEM RESISTANCE IS 25 OHMS OR LESS

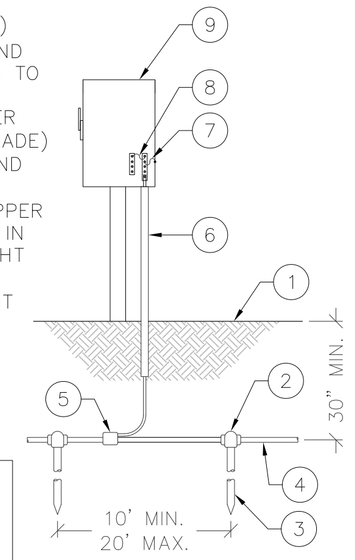

GROUND ROD DETAIL — SCALE: N.T.S. — 4

CORNER FENCE GROUNDING KEYED NOTES: (#)

1. ERICO EXOTHERMIC WELD CONNECTION "VB" OR EQUIVALENT
2. DETERRENT WIRE GROUNDING CLAMP (HARGER FGC2) TRIM LEAD AS CLOSE TO GROUNDING CLAMP AS POSSIBLE
3. ERICO EXOTHERMIC WELD CONNECTION "HA" OR EQUIVALENT
4. #2 AWG SOLID TINNED BARE COPPER WIRE, BOND FENCE FABRIC TO GROUND CONDUCTOR
5. FENCE FABRIC GROUNDING CLAMP (TYP.)
6. GROUND CONDUCTOR WITH ERICO EXOTHERMIC WELD "VS" OR EQUIVALENT
7. CONNECT FENCE BONDING CONDUCTOR TO EXTERNAL GROUNDING ELECTRODE SYSTEM USING EXOTHERMIC WELD OR IRREVERSIBLE HIGH COMPRESSION FITTING
8. ERICO EXOTHERMIC WELD CONNECTION "PC" OR EQUIVALENT TO GROUND RING
9. GROUNDING RADIAL TO SYSTEM GROUND RING
10. GATE JUMPER WITH EIRCO EXOTHERMIC WELD "VS" OR EQUIVALENT

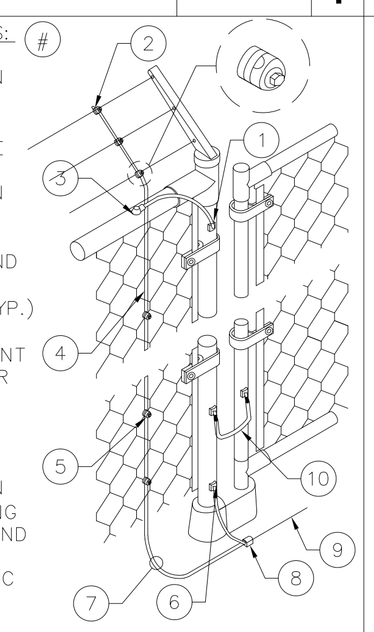

FENCE GROUNDING DETAIL — SCALE: N.T.S. — 5

POLE GROUNDING KEYED NOTES: (#)

1. HYBRID
2. HYBRID GROUNDING KIT
3. HEX BOLTS; APPROVED TWO HOLE LUG CONNECTION WITH STAINLESS HARDWARE
4. EXOTHERMIC WELD #2 AWG STRANDED BARE TINNED COPPER
5. TINNED COPPER POLE GROUND BUSS BAR

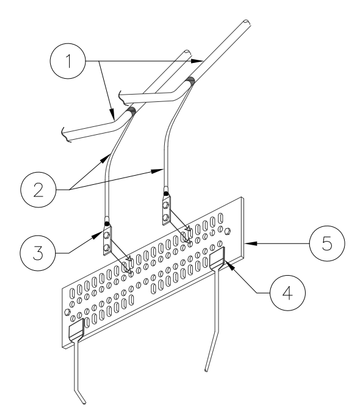

POLE GROUND BUSS BAR — SCALE: N.T.S. — 6

TYPICAL MONOPOLE GROUNDING KEYED NOTES: (#)

1. MONOPOLE
2. EXOTHERMIC WELD TO MANUFACTURER INSTALLED BONDING TAB (TYP.)
3. FINISHED GRADE
4. OUTLINE OF POLE FOUNDATION
5. #2 AWG SOLID TINNED BARE COPPER CONDUCTOR ROUTED IN FLEXIBLE NON-METALLIC LIQUID TIGHT CONDUIT (CARFLEX) (TYP. OF 3)
6. GROUND RING
7. EXOTHERMIC CONNECTION TO GROUND RING (TYPE PT)
8. GROUND ROD (TYP.)

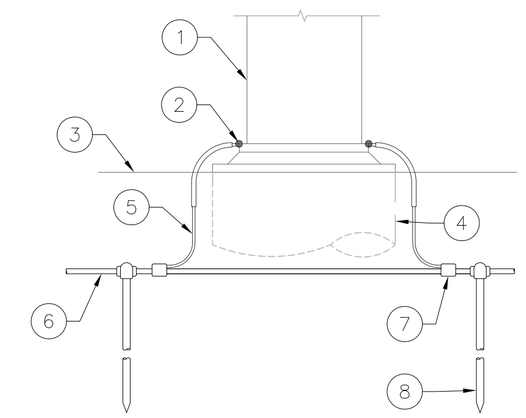

MONOPOLE GROUNDING DETAIL — SCALE: N.T.S. — 7

WEATHERPROOFING KEYED NOTES: (#)

1. COAX
2. COAX TO JUMPER CONNECTION (TYP.)
3. JUMPER (TYP.)
4. 3M SCOTCH SUPER 33+ VINYL ELECTRICAL TAPE (OR EQUIVALENT)
5. VAPOR WRAP SEALANT

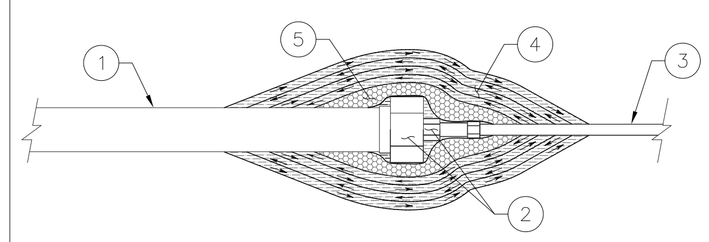

WEATHERPROOF DETAIL — SCALE: N.T.S. — 8

ANTENNA BUSS BAR KEYED NOTES: (#)

1. #2 AWG STRANDED Cu WIRE WITH GREEN, 600V, THWN INSULATION OR BLACK MARKED AS REQUIRED BY NEC
2. TINNED COPPER POLE BUSS BAR ATTACHED DIRECTLY TO POLE STEEL

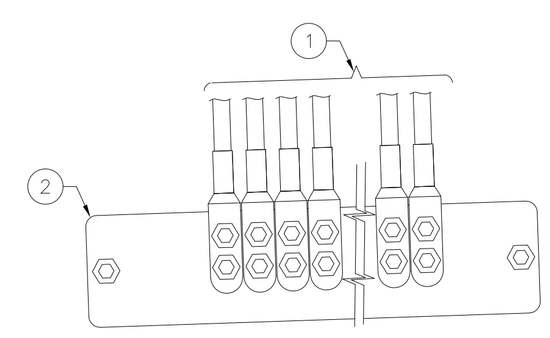

ANTENNA BUSS BAR DETAIL — SCALE: N.T.S. — 9

GROUND LUG KEYED NOTES: (#)

1. NUT
2. LOCK WASHER
3. FLAT WASHER
4. BOLT
5. BURNDY GROUND LUG (SEE TABLE FOR SIZE AND MODEL)
6. HEAT SHRINK (CLEAR)
7. GROUNDING CONDUCTOR
8. GROUND BUSS BAR OR METALLIC BONDING SURFACE
9. BURNDY 2-HOLE LUG W/ LONG BARREL FOR #6 AWG STRANDED
10. BARE WIRE TO BE NO-OXED AT BOTH ENDS
11. HEAT SHRINK
12. #6 AWG THHN COPPER WIRE

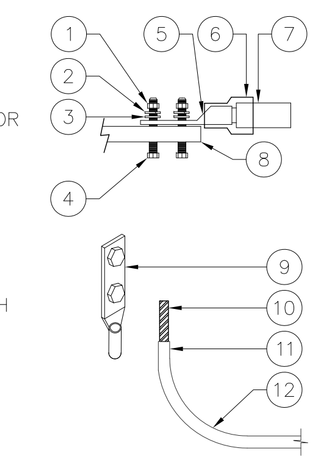

WIRE SIZE	BURNDY LUG	BOLT SIZE
#6 AWG	YA6C-2TC38	3/8" – 16 NC S 3 BOLT
#2 AWG SOLID	YA3C-2TC38	3/8" – 16 NC S 3 BOLT
#2 AWG STRANDED	YA2C-2TC381	3/8" – 16 NC S 3 BOLT
#2/0 AWG	YA26-2TC38	3/8" – 16 NC S 3 BOLT
#4/0 AWG	YA28-2N	1/2" – 16 NC S 3 BOLT

GROUNDING LUG DETAIL — SCALE: N.T.S. — 10

TYPICAL POLE/ICE BRIDGE GROUNDING KEYED NOTES: (#)

1. "SUREGROUND" GROUND KIT .
2. TINNED SOLID ALLOY 110 COPPER GROUND BUS BAR AT BOTTOM OF POLE (TGB); BOND DIRECTLY TO MONOPOLE STEEL
3. RF TRANSMISSION LINE (COAX)
4. MONOPOLE
5. EXOTHERMIC WELD TO MANUFACTURER INSTALLED BONDING TAB (TYP.)
6. FINISHED GRADE
7. OUTLINE OF POLE FOUNDATION
8. EXOTHERMIC WELD (TYP.)
9. ICE BRIDGE
10. #6 AWG THHN COPPER WIRE W/ MECHANICAL CONNECTION TO EACH ICE BRIDGE SECTION (TYP.)
11. COAX CABLE AND HANGERS
12. "SUREGROUND" GROUND KIT
13. EXTERNAL GROUND BUS BAR (EGB)
14. CONDUCTOR ROUTED IN PVC OR FLEXIBLE NON-CONDUCTIVE CONDUIT (CARFLEX) (TYP.)
15. #2 AWG SOLID TINNED BARE COPPER WIRE TO SUPPORT POST (TYP.)
16. OUTSIDE EDGE OF SHELTER FOUNDATION
17. #2 AWG SOLID TINNED BARE COPPER WIRE (GROUND RING) MIN. 30" BELOW GRADE
18. 5/8"øx10' LONG COPPER CLAD GROUND ROD (TYP.)
19. NOT USED
20. OUTLINE OF EQUIPMENT SHELTER
21. ARRESTOR TRAPEZE KIT IF NEEDED
22. CABLE ENTRY PORT
23. MAIN GROUND BUS BAR (MGB)
24. #2 AWG SOLID TINNED BARE COPPER GROUND CONDUCTOR TO GROUND RING
25. FINISHED FLOOR OF SHELTER
26. BOND BASE OF GROUNDING STRAP TO GROUND RING

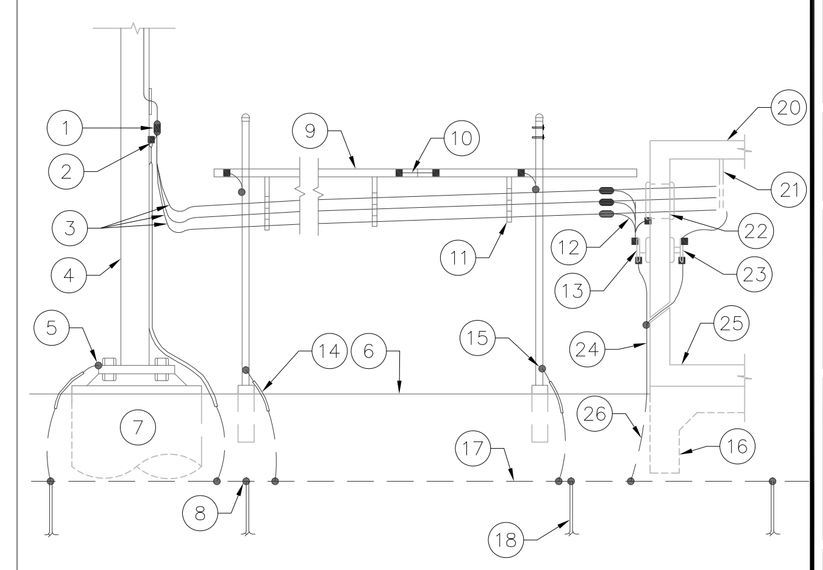

POLE/ICE BRIDGE DETAIL — SCALE: N.T.S. — 11

Commnet
Connecting Rural America

ABn ENGINEERING
1337 E DESERT FLOWER LANE
PHOENIX, AZ 85048
PHONE: (480) 213-8524

PE SEAL

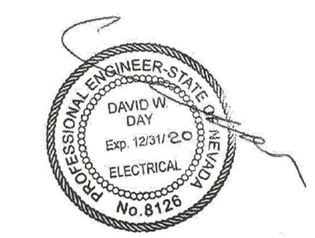

4-4-19

DESIGNER: JASON NGO

LEAD EE: SB

LEAD CE/SE: SAM

SUBMITTALS

REV.	DATE	DESCRIPTION	BY
H	1/25/19	COMMENTS	JN
I	2/13/19	COMMENTS	JN
J	2/18/19	COMMENTS	JN
K	2/19/19	FINAL CD	JN
L	4/3/19	REVISED CD	JN

THE INFORMATION CONTAINED IN THIS SET OF DOCUMENTS IS PROPRIETARY BY NATURE. ANY USE OR DISCLOSURE OTHER THAN THAT WHICH RELATES TO COMMNET WIRELESS IS STRICTLY PROHIBITED.

SITE NAME
VYA, NEVADA

PROJECT
RAW LAND MONOPOLE

SITE ADDRESS
LAT: 41° 35' 30.76358"N
LONG: 119° 52' 47.14752"W
89000A DUGWAY ROAD
GERLACH, NV 89413

SHEET TITLE
GROUNDING DETAILS

SHEET NUMBER
G-2

Copyright ©Abn Engineering (AbnE), 2018. This document is a proprietary item of Abn Engineering and contains information solely for use on a specific project. It cannot be used, disclosed or reproduced in any format without AbnE's prior written permission. Only our customer has the right to use the information contained in this document for construction purpose of this project up to 12 months from seal & stamped date on this document. The user agrees to indemnify defend , & hold harmless AbnE from all claims, suits, liability, demands, judgments, or expenses arising from or related to the use or re-use of the electronic files. All rights reserved.

WSUP19-0003
EXHIBIT E

Skip to Main Content

State of Nevada

Executive Department

EXECUTIVE ORDER 2018-32

ORDER ESTABLISHING USE OF THE NEVADA GREATER SAGE-GROUSE CONSERVATION PLAN AND CREDIT SYSTEM

WHEREAS, restoration and maintenance of the sagebrush ecosystem is essential to Nevada's sagebrush obligate species, domestic livestock, watersheds, biodiversity and productivity; and

WHEREAS, the 78th Nevada State Legislative Session (2013) established the Sagebrush Ecosystem Council as a statutory body "authorized to establish and carry out programs to preserve, restore and enhance sagebrush ecosystems"; and

WHEREAS, in order to maintain and enhance Greater Sage-Grouse populations and the habitats on which this species depends, the State of Nevada Sagebrush Ecosystem Council and partnering federal and local agencies developed and implemented the 2014 Greater Sage-Grouse Conservation Plan (as amended) and the Nevada Conservation Credit System and Scientific Methods Document/Habitat Quantification Tool as the science based program to quantify habitat improvements and offset anthropogenic disturbances to Greater Sage-Grouse habitats; and

WHEREAS, it is in the best interests of the State of Nevada to continue efforts to protect and enhance Greater Sage-Grouse habitats; and

WHEREAS, Article 5, Section 1 of the Nevada Constitution provides: "The supreme executive power of this State, shall be vested in a Chief Magistrate who shall be Governor of the State of Nevada."

NOW, THEREFORE, by the authority vested in me as Governor by the Constitution and laws of the State of Nevada and the United States, it is hereby ordered as follows:

1. The Sagebrush Ecosystem Council shall adopt regulations requiring compliance with the Nevada Sage-Grouse Conservation Plan and Nevada Conservation Credit System for the conservation of the Greater Sage-Grouse and their habitats using compensatory mitigation for anthropogenic disturbances on federal and state lands that cannot be avoided or further minimized as determined through the Conservation Credit System.

2. As these regulations are being developed and finalized, this Executive Order shall serve as direction to state agencies working with their federal counterparts and Nevada stakeholders to implement mitigation strategies in accordance with the Nevada Conservation Credit System.

WSUP19-0003
EXHIBIT F

3. Nevada's Conservation Credit System/Habitat Quantification Tool shall be used as the mechanism to quantify and mitigate direct and indirect impacts to Greater Sage-Grouse habitats as a result of anthropogenic disturbance activities or projects occurring within Greater Sage-Grouse designated habitat areas. The Nevada Conservation Credit System shall be required on lands managed by state or federal agencies. Private land owners will not be required to utilize the Conservation Credit System on private lands but can do so voluntarily.

4. This Executive Order, together with the Nevada Sage-Grouse Conservation Plan and Nevada Conservation Credit System, constitute Nevada's strategy and primary mechanism to conserve and ensure conservation of the Greater Sage-Grouse and their habitats.

5. This Executive Order shall remain in effect in perpetuity, unless rescinded at a future date.

IN WITNESS WHEREOF, I have hereunto set my hand and caused the Great Seal of the State of Nevada to be affixed at the State Capitol in Carson City, this 7th day of December, in the year two thousand eighteen.

Governor of the State of Nevada

By the Governor

Secretary of State

Deputy Secretary of State

WSUP19-0003
EXHIBIT F

March 4, 2021

Trevor Lloyd
Washoe County
Planning and Development Division
1001 E. Ninth Street
Reno, NV 89512

RE: Amendment of Conditions Application for WSUP19-003, Vya, NV 89000A Dugway Road, Gerlach, NV 89413

Trevor,

Per our recent conversations, please find enclosed an Amendment of Conditions Application for the above referenced Special Use Permit where Commnet of Nevada, LLC requests to amend condition 1 (d) for an additional one (1) year to allow all final permitting and right of way grants to be issued by Washoe County and the Bureau of Land Management. The submittal contains the following documents.

This application is for the March 8, 2021 submittal to be placed on the May 6, 2021 Board of Adjustment Agenda.

1. Filing Fee Check
2. Washoe County Development Application
3. Amendment of Conditions Application Supplemental Information
4. Property Owner Affidavit
5. Proof of Property Tax Payment – not required, Federal lands
5. Site Plan and survey
6. Location Map
7. Flash Drive containing Application materials

Upon review, if you have any questions or need additional materials, I can be reached at (314) 640-5182 cell or (314) 569-2275 office.

Sincerely,

Julie Krekeler
General Manager

Enclosures

Washoe County Development Application

Your entire application is a public record. If you have a concern about releasing personal information, please contact Planning and Building staff at 775.328.6100.

Project Information	**Staff Assigned Case No.:** _____
Project Name: Commnet Wireless - Vya, NV	
Project Description: Commnet Wireless proposes the construction of a new unmanned wireless communication facility serving the Vya and surrounding area.	
Project Address: Washoe County E911 Assigned Address: 89000A Dugway Road, Gerlach, NV 89413	
Project Area (acres or square feet): 7,469 sf lease area along with access and utility easements	
Project Location (with point of reference to major cross streets **AND** area locator): From Vya, NV, head north on CR 34 N (1.4 miles) continue straight onto Dugway Raod (1.5 miles). Turn left onto unnamed dirt road to site.	

Assessor's Parcel No.(s):	Parcel Acreage:	Assessor's Parcel No.(s):	Parcel Acreage:
061-010-49	773.890015 acres		

Indicate any previous Washoe County approvals associated with this application:
Case No.(s). WSUP19-003 (Vya Monopole)

Applicant Information (attach additional sheets if necessary)

Property Owner:		**Professional Consultant:**	
Name: United States of America - BLM		Name: CIS Communications, LLC	
Address: 708 W. 12th St		Address: 749 Old Ballas Road	
Alturas, CA	Zip: 96101	Creve Coeur, MO	Zip: 63141
Phone: (530) 233-7907	Fax:	Phone: (314) 569-2275	Fax:
Email: rpedotti@blm.gov		Email: julie@ciscomm.com	
Cell:	Other:	Cell: (314) 640-5182	Other:
Contact Person: Rylee Pedotti, Realty Specialist		Contact Person: Julie Krekeler - General Manager	
Applicant/Developer:		**Other Persons to be Contacted:**	
Name: Commnet of Nevada, LLC (dba Commnet Wireless)		Name:	
Address: 1562 North Park Street		Address:	
Castle Rock, CO	Zip: 80109		Zip:
Phone: (720) 733-7854	Fax:	Phone:	Fax:
Email: Cindy.Phillips@geoverse.io		Email:	
Cell: (720) 733-7854	Other:	Cell:	Other:
Contact Person: Cindy Phillips - Director of Real Estate		Contact Person:	

For Office Use Only

Date Received:	Initial:	Planning Area:
County Commission District:		Master Plan Designation(s):
CAB(s):		Regulatory Zoning(s):

Amendment of Conditions Application
Supplemental Information

(All required Information may be separately attached)

Required Information

1. The following information is required for an Amendment of Conditions:
   a. Provide a written explanation of the proposed amendment, why you are asking for the amendment, and how the amendment will modify the approval.
   b. Identify the specific Condition or Conditions that you are requesting to amend.
   c. Provide the requested amendment language to each Condition or Conditions, and provide both the ***existing*** and ***proposed*** **condition(s)**.

See Attached Supplemental Information.

2. Describe any potential impacts to public health, safety, or welfare that could result from granting the amendment. Describe how the amendment affects the required findings as approved.

See Attached Supplemental Information.

Property Owner Affidavit

Applicant Name: Commnet of Nevada, LLC

The receipt of this application at the time of submittal does not guarantee the application complies with all requirements of the Washoe County Development Code, the Washoe County Master Plan or the applicable area plan, the applicable regulatory zoning, or that the application is deemed complete and will be processed.

STATE OF NEVADA)
)
COUNTY OF WASHOE)

I, CRAIG R. DRAKE,
(please print name)

being duly sworn, depose and say that I am the owner* of the property or properties involved in this application as listed below and that the foregoing statements and answers herein contained and the information herewith submitted are in all respects complete, true, and correct to the best of my knowledge and belief. I understand that no assurance or guarantee can be given by members of Planning and Building.

(A separate Affidavit must be provided by each property owner named in the title report.)

Assessor Parcel Number(s): 061-010-49

Printed Name CRAIG R. DRAKE

Signed [signature]

Address 708 W. 12th St.

Alturas, CA 96101

Subscribed and sworn to before me this _____ day of _____, _____.

(Notary Stamp)

See att. Jurat
Notary Public in and for said county and state

My commission expires: _____

*Owner refers to the following: (Please mark appropriate box.)

- ☐ Owner
- ☐ Corporate Officer/Partner (Provide copy of record document indicating authority to sign.)
- ☐ Power of Attorney (Provide copy of Power of Attorney.)
- ☐ Owner Agent (Provide notarized letter from property owner giving legal authority to agent.)
- ☐ Property Agent (Provide copy of record document indicating authority to sign.)
- ☒ Letter from Government Agency with Stewardship

CALIFORNIA JURAT WITH AFFIANT STATEMENT **GOVERNMENT CODE § 8202**

☒ See Attached Document (Notary to cross out lines 1–6 below)
☐ See Statement Below (Lines 1–6 to be completed only by document signer[s], *not* Notary)

1
2
3
4
5
6

Signature of Document Signer No. 1 *Signature of Document Signer No. 2 (if any)*

A notary public or other officer completing this certificate verifies only the identity of the individual who signed the document to which this certificate is attached, and not the truthfulness, accuracy, or validity of that document.

State of California
County of Modoc

L. L. GALVIN
Notary Public - California
Modoc County
Commission # 2268119
My Comm. Expires Dec 19, 2022

Subscribed and sworn to (or affirmed) before me on this 4 day of April, 2019,
Date *Month* *Year*
by
(1) Craig R. Drake
(and ~~(2)~~),
Name(s) of Signer(s)

proved to me on the basis of satisfactory evidence to be the person(s) who appeared before me.

Signature
Signature of Notary Public

Seal
Place Notary Seal Above

OPTIONAL

Though this section is optional, completing this information can deter alteration of the document or fraudulent reattachment of this form to an unintended document.

Description of Attached Document

Title or Type of Document: _____ Document Date: _____

Number of Pages: _____ Signer(s) Other Than Named Above: _____

©2014 National Notary Association • www.NationalNotary.org • 1-800-US NOTARY (1-800-876-6827) Item #5910

Copyright ©Abn Engineering (AbnE), 2018. This document is a proprietary item of Abn Engineering and contains information solely for use on a specific project. It cannot be used, disclosed or reproduced in any format without AbnE's prior written permission. Only our customer has the right to use the information contained in this document for construction purpose of this project up to 12 months from seal & stamped date on this document. The user agrees to indemnify defend , & hold harmless AbnE from all claims, suits, liability, demands, judgments, or expenses arising from or related to the use or re-use of the electronic files. All rights reserved.

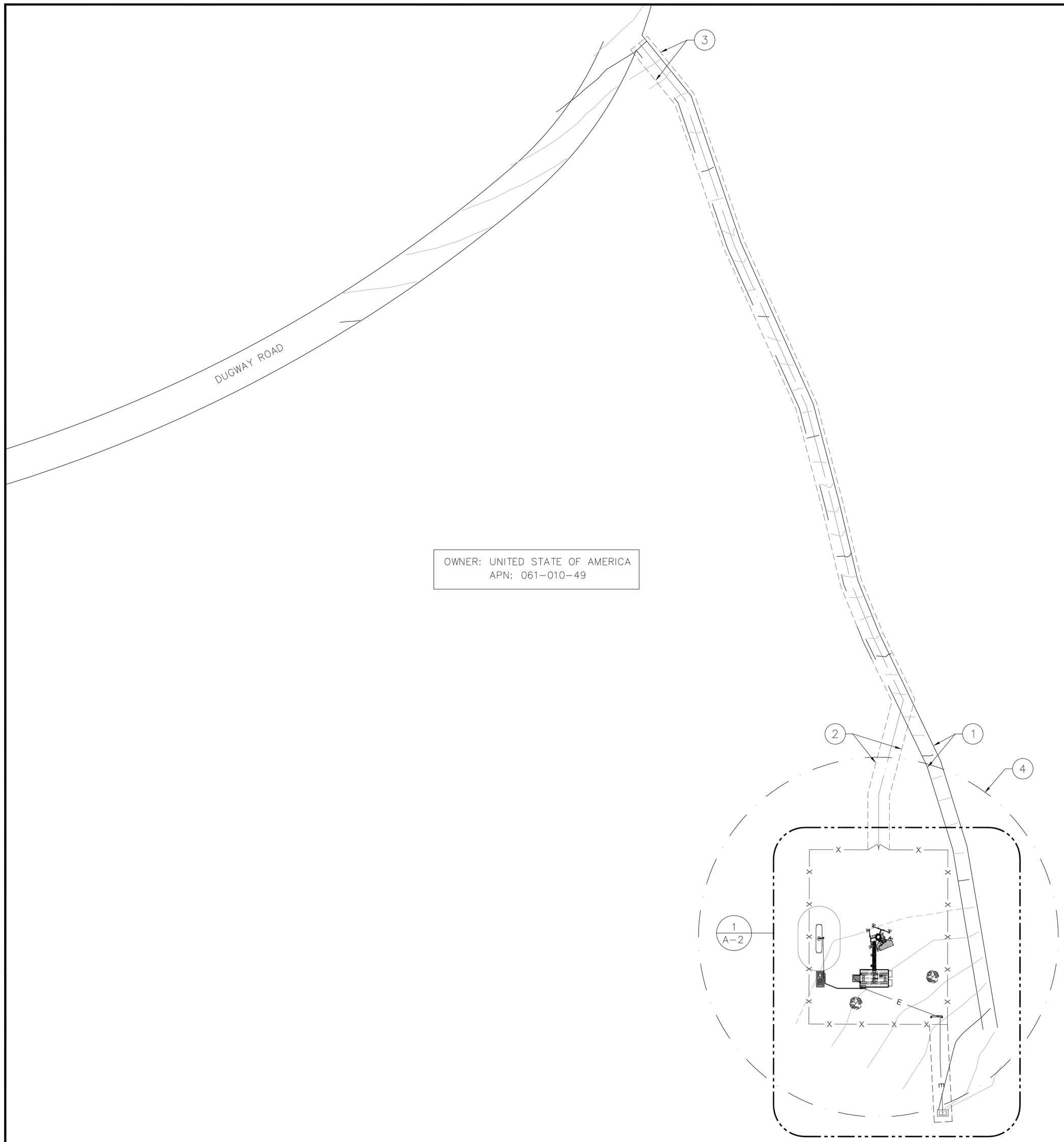

COMPOUND PLAN KEYED NOTES: (#)

1. (E) DIRT ROAD
2. (N) 12' WIDE DIRT ACCESS ROAD
3. (N) 12' WIDE ACCESS EASEMENT
4. CONSTRUCTION WORK AREA ±100' RADIUS, THE AREA WITHIN THIS BOUNDARY TO BE USED AS TEMPORARY CONSTRUCTION ZONE, STAGING MATERIAL AREA, VEHICLE ACTIVITY AREA AND GENERAL CONSTRUCTION PURPOSE. THIS AREA WILL RECLAIMED AND CLEANED UP AFTER CONSTRUCTION IS COMPLETE.

DIGALERT
Call Toll Free
1-800-227-2600
2 Working Days Before You Dig
NEVADA ONE-STOOP SHOP

Commnet
Connecting Rural America

ABn ENGINEERING
1337 E DESERT FLOWER LANE
PHOENIX, AZ 85048
PHONE: (480) 213-8524

PE SEAL

NATIONAL CERTIFIED ENGINEER · STATE OF NEVADA
SANDEEP A. MANE
Exp. 12/31/19
CIVIL / S.E.
No. 19064
4/3/19

DESIGNER:	JASON NGO
LEAD EE:	SB
LEAD CE/SE:	SAM

SUBMITTALS

REV.	DATE	DESCRIPTION	BY
H	1/25/19	COMMENTS	JN
I	2/13/19	COMMENTS	JN
J	2/18/19	COMMENTS	JN
K	2/19/19	FINAL CD	JN
L	4/3/19	REVISED CD	JN

THE INFORMATION CONTAINED IN THIS SET OF DOCUMENTS IS PROPRIETARY BY NATURE. ANY USE OR DISCLOSURE OTHER THAN THAT WHICH RELATES TO COMMNET WIRELESS IS STRICTLY PROHIBITED.

SITE NAME
VYA, NEVADA

PROJECT
RAW LAND MONOPOLE

SITE ADDRESS
LAT: 41° 35' 30.76358"N
LONG: 119° 52' 47.14752"W
89000A DUGWAY ROAD
GERLACH, NV 89413

SHEET TITLE
OVERALL SITE PLAN

SHEET NUMBER
A-1

OVERALL SITE PLAN

22"x34"SCALE: 1" = 30'-0"
11"x17" SCALE: 1" = 60'-0"
30' 15' 0' 30'

WAC21-0002
EXHIBIT C

WASHOE COUNTY
COMMUNITY SERVICES DEPARTMENT
Planning and Building

1001 EAST 9TH STREET
RENO, NEVADA 89512-2845
PHONE (775) 328-6100
FAX (775) 328.6133

Board of Adjustment Action Order

Special Use Permit Case Number WSUP19-0003 (Vya Monopole)

Decision:	Approval with Conditions
Decision Date:	June 6, 2019
Mailing/Filing Date:	June 12, 2019
Applicant:	Commnet of Nevada, LLC
Assigned Planner:	Jacob Parker, Planner Washoe County Community Services Department Planning and Building Division
Phone:	775.328.3628
E-Mail:	jparker@washoecounty.us

Special Use Permit Case Number WSUP19-0003 (Vya Monopole) – For possible action, hearing, and discussion to approve a special use permit for the installation and operation of a 150-foot tall monopole telecommunication facility with all necessary appurtenances/supporting equipment and facilities and to vary development code requirements for landscaping for a commercial use by waiving them for this project.

- Applicant: Commnet of Nevada LLC
- Property Owner: United States of America
- Location: Immediately north of State Route 8A, ±2 miles west of Fortynine Lake
- APN: 061-010-49
- Parcel Size: 773.89 acres
- Master Plan: Rural (R)
- Regulatory Zone: General Rural (GR)
- Area Plan: High Desert
- Citizen Advisory Board: Gerlach/Empire
- Development Code: Authorized in Article 324, Communication Facilities and Article 810 Special Use Permits
- Commission District: 5 – Commissioner Herman

Notice is hereby given that the Washoe County Board of Adjustment granted approval with conditions for the above referenced case number based on the findings in accordance with Washoe County Development Code Article 810, Special Use Permits. If no appeals have been filed within 10 calendar days from the Mailing/Filing Date shown on this Action Order, the approval by the Washoe County Board of Adjustment is final. If filed, an appeal stays any further action on the decision until final resolution of the appeal. An appeal shall be filed in accordance with the provisions found in Article 912 of the Washoe County Development Code.

The action was based on the following findings in accordance with Washoe County Code Section 110.810.30:

1. Consistency. That the proposed use is consistent with the action programs, policies, standards and maps of the Master Plan and the High Desert Area Plan;
2. Improvements. That adequate utilities, roadway improvements, sanitation, water supply, drainage, and other necessary facilities have been provided, the proposed improvements are properly related to existing and proposed roadways, and an adequate public facilities determination has been made in accordance with Division Seven;
3. Site Suitability. That the site is physically suitable for a telecommunications facility (monopole), and for the intensity of such a development;
4. Issuance Not Detrimental. That issuance of the permit will not be significantly detrimental to the public health, safety or welfare; injurious to the property or improvements of adjacent properties; or detrimental to the character of the surrounding area;
5. Effect on a Military Installation. Issuance of the permit will not have a detrimental effect on the location, purpose or mission of the military installation.

This Action Order is issued subject to the attached conditions and Washoe County development standards. Please contact the planner assigned to your project at the above-referenced phone number within 7 days of receipt of this Order to review the steps necessary to satisfy the Conditions of Approval. Any business license, certificate of occupancy, or final approval shall not be issued until all of the Conditions of Approval are satisfied. Additionally, compliance shall be required with all federal, state, and local statutes, ordinances, and regulations applicable to the approved project.

This Action Order does not authorize grading or building without issuance of the necessary permits from the Washoe County Planning and Building Division.

Washoe County Community Services Department
Planning and Building Division

Trevor Lloyd
Secretary to the Board of Adjustment

TL/JP/df

Attachments: Conditions of Approval

Applicant: Commnet of Nevada LLC
1562 North Park St.
Castle Rock, CO 80109

Owner: United States of America – BLM
2550 Riverside Dr.
Susanville, CA 96130

Action Order xc: Mike Large, District Attorney's Office; Keirsten Beck, Assessor's Office; Rigo Lopez, Assessor's Office; Tim Simpson, Utilities; Leo Vesely, Engineering and Capital Projects; Don Coon, Truckee Meadows Fire Protection District; Nevada Division of Environmental Protection, 901 South Stewart Street, Suite. 4001, Carson City, NV 89701-5249; Regional Transportation Commission; Truckee Meadows Regional Planning Agency; Gerlach/Empire Citizen Advisory Board

Conditions of Approval

Special Use Permit Case Number WSUP19-0003

The project approved under Special Use Permit Case Number WSUP19-0003 shall be carried out in accordance with the Conditions of Approval granted by the Board of Adjustment on June, 06 2019. Conditions of Approval are requirements placed on a permit or development by each reviewing agency. These Conditions of Approval may require submittal of documents, applications, fees, inspections, amendments to plans, and more. These conditions do not relieve the applicant of the obligation to obtain any other approvals and licenses from relevant authorities required under any other act.

Unless otherwise specified, all conditions related to the approval of this Special Use Permit shall be met or financial assurance must be provided to satisfy the conditions of approval prior to issuance of a grading or building permit. The agency responsible for determining compliance with a specific condition shall determine whether the condition must be fully completed or whether the applicant shall be offered the option of providing financial assurance. All agreements, easements, or other documentation required by these conditions shall have a copy filed with the County Engineer and the Planning and Building Division.

Compliance with the conditions of approval related to this Special Use Permit is the responsibility of the applicant, his/her successor in interest, and all owners, assignees, and occupants of the property and their successors in interest. Failure to comply with any of the conditions imposed in the approval of the Special Use Permit may result in the institution of revocation procedures.

Washoe County reserves the right to review and revise the conditions of approval related to this Special Use Permit should it be determined that a subsequent license or permit issued by Washoe County violates the intent of this approval.

For the purpose of conditions imposed by Washoe County, "may" is permissive and "shall" or "must" is mandatory.

Conditions of Approval are usually complied with at different stages of the proposed project. Those stages are typically:

- Prior to permit issuance (i.e., grading permits, building permits, etc.).
- Prior to obtaining a final inspection and/or a certificate of occupancy.
- Prior to the issuance of a business license or other permits/licenses.
- Some "Conditions of Approval" are referred to as "Operational Conditions." These conditions must be continually complied with for the life of the project or business.

The Washoe County Commission oversees many of the reviewing agencies/departments with the exception of the following agencies.

- **The DISTRICT BOARD OF HEALTH, through the Washoe County Health District, has jurisdiction over all public health matters in the Health District. Any conditions set by the Health District must be appealed to the District Board of Health.**

- **The RENO-TAHOE AIRPORT AUTHORITY is directed and governed by its own Board. Therefore, any conditions set by the Reno-Tahoe Airport Authority must be appealed to their Board of Trustees.**

- **The REGIONAL TRANSPORTATION COMMISSION (RTC) is directed and governed by its own board. Therefore, any conditions set by the Regional Transportation Commission must be appealed to that Board.**

FOLLOWING ARE CONDITIONS OF APPROVAL REQUIRED BY THE REVIEWING AGENCIES. EACH CONDITION MUST BE MET TO THE SATISFACTION OF THE ISSUING AGENCY.

Washoe County Planning and Building Division

1. The following conditions are requirements of Planning and Building, which shall be responsible for determining compliance with these conditions.

   Contact Name – Jacob Parker (775) Phone Number, jparker@washoecounty.us

   a. The applicant shall attach a copy of the Action Order approving this project to all administrative permit applications (including building permits) applied for as part of this special use permit.

   b. The applicant shall demonstrate substantial conformance to the plans approved as part of this special use permit. The Planning and Building Division shall determine compliance with this condition.

   c. The applicant shall demonstrate conformance to State of Nevada Executive Order 2018-32, Order Establishing Use of the Nevada Greater Sage-Grouse Conservation Plan and Credit System. The Planning and Building Division shall determine compliance with this condition.

   d. The applicant shall submit complete construction plans and building permits shall be issued within two years from the date of approval by Washoe County. The applicant shall complete construction within the time specified by the building permits. Compliance with this condition shall be determined by the Planning and Building Division.

   e. All existing trees and landscaping removed as part of the construction of this facility shall be replaced at the rate of two trees for each tree removed and two bushes for each bush removed.

   f. The monopole tower shall not exceed 150 feet in maximum height, as approved under this special use permit WSPU19-0003.

   g. A note shall be placed on all construction drawings and grading plans stating:

   NOTE

   Should any prehistoric or historic remains/artifacts be discovered during site development, work shall temporarily be halted at the specific site and the State Historic Preservation Office of the Department of Museums, Library and Arts shall be notified to record and photograph the site. The period of temporary delay shall be limited to a maximum of two (2) working days from the date of notification.

h. Prior to the issuance of a building permit, the applicant shall provide a certification by a professional that the facility complies with Federal Communications Commission (FCC) regulations for Radio Frequency Emissions (RFE).

i. Prior to the issuance of a building permit the applicant shall record a statement of assurance that the wireless communications facility shall be removed if the use of the facility is discontinued for a period of twelve (12) consecutive months.

j. The following **Operational Conditions** shall be required for the life of the unmanned wireless telecommunications monopole.

   i. This special use permit shall remain in effect until or unless it is revoked or is inactive for one year.

   ii. Failure to comply with the Conditions of Approval shall render this approval null and void. Compliance with this condition shall be determined by the Planning and Building Division.

   iii. The applicant and any successors shall direct any potential purchaser/operator of the site and/or the special use permit to meet with the Planning and Building Division staff to review Conditions of Approval prior to the final sale of the site and/or the special use permit. Any subsequent purchaser/operator of the site and/or the special use permit shall notify the Planning and Building Division of the name, address, telephone number, and contact person of the new purchaser/operator within 30 days of the final sale.

Washoe County Engineering and Capital Projects

2. The following conditions are requirements of the Engineering Division, which shall be responsible for determining compliance with these conditions.

   Contact Name – Leo Vesely and (775) 328-2041, lvesely@washoecounty.us

   a. A complete set of construction improvement drawings, including an on-site grading plan, shall be submitted when applying for a building/grading permit. Grading shall comply with best management practices (BMP's) and shall include detailed plans for grading, site drainage, erosion control (including BMP locations and installation details), slope stabilization, and mosquito abatement. Placement or removal of any excavated materials shall be indicated on the grading plan. Silts shall be controlled on-site and not allowed onto adjacent property.

   b. The applicant shall provide documentation of easements for the lease area, access and utilities. A copy of the easements shall be submitted to the Engineering Division prior to the approval of a building permit.

   c. All existing and proposed easements shall be shown on the site and/or grading plan.

*** End of Conditions ***

Washoe County Treasurer
P.O. Box 30039, Reno, NV 89520-3039
ph: (775) 328-2510 fax: (775) 328-2500
Email: tax@washoecounty.us

Washoe County Treasurer
Tammi Davis

Account Detail

Back to Account Detail | Change of Address | Print this Page

CollectionCart

	Items	Total	
Collection Cart	0	$0.00	Checkout View

Pay Online

No payment due for this account.

Washoe County Parcel Information

Parcel ID	Status	Last Update
06101049	Active	3/3/2021 1:40:39 AM

Current Owner:
UNITED STATES OF AMERICA

NONE
RENO, NV 00000

SITUS:
0 UNSPECIFIED
WASHOE COUNTY NV

Taxing District
9000

Geo CD:

Tax Bill (Click on desired tax year for due dates and further details)

Tax Year	Net Tax	Total Paid	Penalty/Fees	Interest	Balance Due
2020	$0.00	$0.00	$0.00	$0.00	$0.00
2019	$0.00	$0.00	$0.00	$0.00	$0.00
2018	$0.00	$0.00	$0.00	$0.00	$0.00
2017	$0.00	$0.00	$0.00	$0.00	$0.00
2016	$0.00	$0.00	$0.00	$0.00	$0.00
				Total	$0.00

Disclaimer

- ALERTS: If your real property taxes are delinquent, the search results displayed may not reflect the correct amount owing. Please contact our office for the current amount due.
- For your convenience, online payment is available on this site. E-check payments are accepted without a fee. However, a service fee does apply for online credit card payments. See Payment Information for details.

Pay By Check

Please make checks payable to:
WASHOE COUNTY TREASURER

Mailing Address:
P.O. Box 30039
Reno, NV 89520-3039

Overnight Address:
1001 E. Ninth St., Ste D140
Reno, NV 89512-2845

Payment Information

Special Assessment District

Installment Date Information

Assessment Information

WAC21-0002
EXHIBIT C

LEGAL DESCRIPTIONS

BEING A PORTION OF SECTION 5, TOWNSHIP 42 NORTH, RANGE 19 EAST, MDB&M., WASHOE COUNTY, NEVADA, DESCRIBED AS FOLLOWS:

"PARCEL A" (LEASE AREA)

COMMENCING AT THE SOUTHWEST CORNER OF THE NORTHWEST QUARTER (NW1/4) OF SECTION 5, TOWNSHIP 42 NORTH, RANGE 19 EAST, M.D.B.&M.;

THENCE NORTH 77°40'28" EAST, 2441.54 FEET TO THE POINT OF BEGINNING;

THENCE SOUTH 89°49'37" EAST, 72.00 FEET TO A POINT HEREINAFTER REFERRED TO AS POINT "A";

THENCE CONTINUING, SOUTH 89°49'37" EAST, 5.00 FEET;

THENCE NORTH 00°10'23" EAST, 97.00 FEET;

THENCE NORTH 89°49'37" WEST, 38.50 FEET TO A POINT HEREINAFTER REFERRED TO AS POINT "B";

THENCE CONTINUING, NORTH 89°49'37" WEST, 38.50 FEET;

SOUTH 00°10'23" WEST, 97.00 FEET TO THE POINT OF BEGINNING.

CONTAINING 7,469 SQ.FT. MORE OR LESS.

"PARCEL B" (UTILITY EASEMENT)

BEING A STRIP OF LAND 10.00 FEET IN WIDTH, LYING 5.00 FEET ON EACH SIDE OF THE FOLLOWING DESCRIBED CENTERLINE:

BEGINNING AT THE AFOREMENTIONED POINT "A";

THENCE SOUTH 12°50'26" EAST, 54.25 FEET TO THE POINT OF TERMINATION.

THE SIDELINES OF THIS STRIP OF LAND ARE TO BE LENGTHENED OR SHORTENED TO INTERSECT AT ALL ANGLE POINTS, AND TO BEGIN ON THE SOUTH LINE OF "PARCEL A".

CONTAINING 542 SQ.FT. MORE OR LESS.

"PARCEL C" (ACCESS EASEMENT)

BEING A STRIP OF LAND 12.00 FEET IN WIDTH, LYING 6.00 FEET ON EACH SIDE OF THE FOLLOWING DESCRIBED CENTERLINE:

BEGINNING AT THE AFOREMENTIONED POINT "B";

THENCE NORTH 00°00'00" EAST, 30.57 FEET;

THENCE NORTH 14°37'01" WEST, 54.43 FEET;

THENCE NORTH 25°42'37" WEST, 39.11 FEET;

THENCE NORTH 22°04'32" WEST, 32.34 FEET;

THENCE NORTH 13°24'41" WEST, 44.10 FEET;

THENCE NORTH 14°43'36" WEST, 57.25 FEET;

THENCE NORTH 24°09'51" WEST, 97.94 FEET;

THENCE NORTH 18°44'16" WEST, 85.71 FEET;

THENCE NORTH 39°03'24" WEST, 40.30 FEET TO THE POINT OF TERMINATION.

THE SIDELINES OF THIS STRIP OF LAND ARE TO BE LENGTHENED OR SHORTENED TO INTERSECT AT ALL ANGLE POINTS, AND TO BEGIN ON THE NORTH LINE OF "PARCEL A".

CONTAINING 5,781 SQ.FT. MORE OR LESS.

PARENT PARCEL LEGAL DESCRIPTION

LYING WITHIN SECTION 5, TOWNSHIP 42 NORTH, RANGE 19 EAST, M.D.M., WASHOE COUNTY, NEVADA.

OWNERSHIP INFORMATION

OWNER = UNITED STATES OF AMERICA
CONTACT = N/A

ASSESSOR'S PARCEL NUMBER = 061-010-49
VESTING DOCUMENT = N/A

TITLE REPORT DATA AND EXCEPTIONS

NO TITLE REPORT PROVIDED.

BASIS OF BEARINGS

GRID NORTH BASED UPON THE NORTH AMERICAN DATUM OF 1983/94 (2011), NEVADA WEST ZONE (2703) COORDINATES PROVIDED BY OPUS SOLUTION; THE DISTANCES ARE BASED ON A GROUND SCALE FACTOR OF 1.0002506172 REFERENCED FROM A POINT NEAR THE PROJECT WITH A LATITUDE OF 41°35'30.19834" N AND A LONGITUDE OF 119°52'47.01529" W AND A NORTH AMERICAN VERTICAL DATUM OF 1988 HEIGHT OF 6167.50 FEET USING GEOID12A

PROPOSED TOWER COORDINATES

NAD 83 LATITUDE = 41°35'30.76358" N
LONGITUDE = 119°52'47.14752" W

SITE GROUND ELEVATION = 6236.20'

STATE PLANE COORDINATES NAD 83, NEVADA WEST ZONE

METERS (GROUND) = NORTHING = 4760184.649
EASTING = 691916.598

FEET (GROUND) = NORTHING = 15617372.47
EASTING = 2270063.04

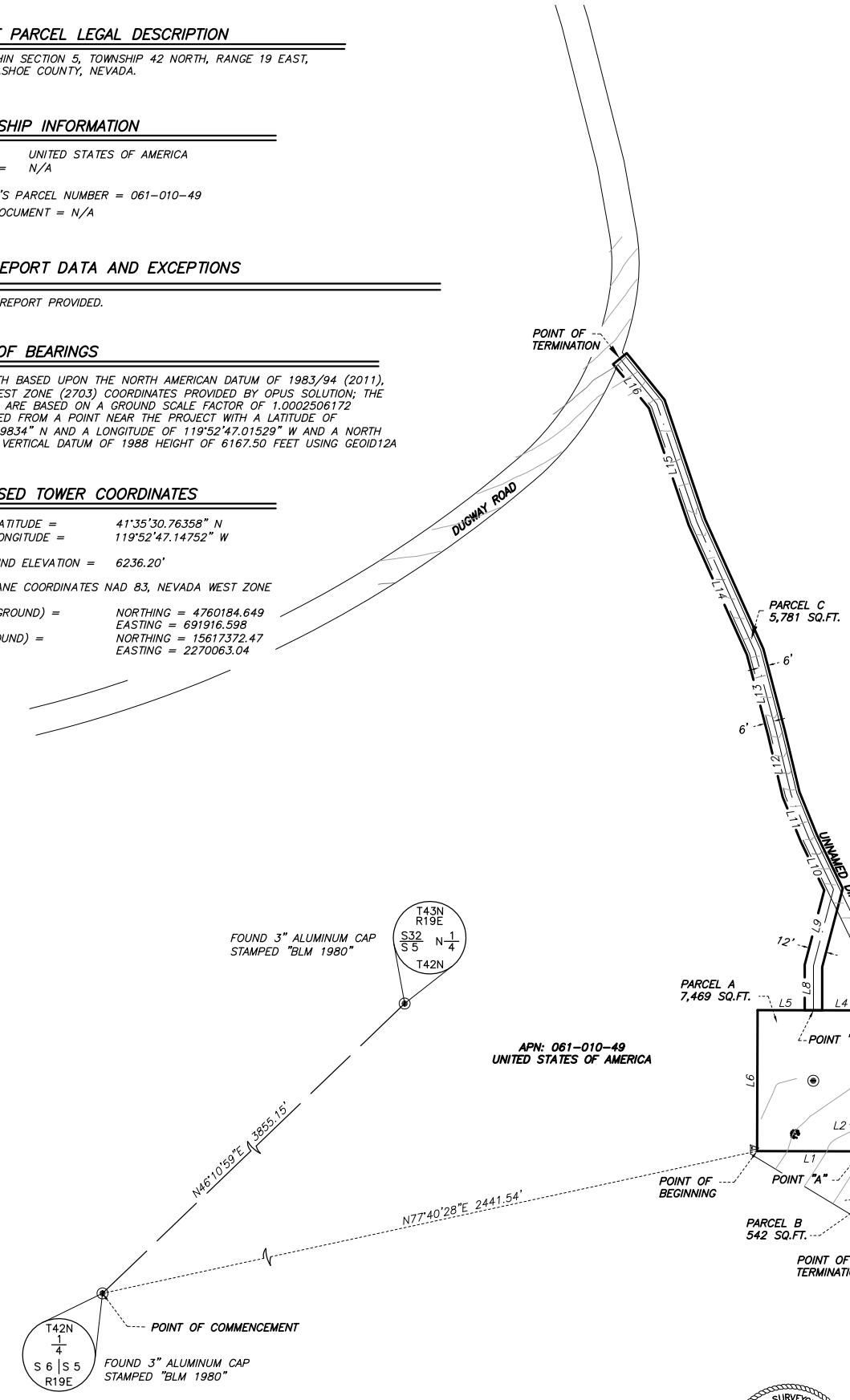

LEGEND

APN	ASSESSORS PARCEL NUMBER
———	PROPOSED EASEMENT LINE
- - - - -	EXISTING EASEMENT LINE
—— ——	SECTION LINE
◉	FOUND MONUMENTATION AS DESCRIBED
	ELECTRIC PULL BOX
	ELECTRIC MARKER

LINE TABLE

LINE	BEARING	DISTANCE
L1	N89°49'37"W	72.00'
L2	N89°49'37"W	5.00'
L3	S0°10'23"W	97.00'
L4	S89°49'37"E	38.50'
L5	S89°49'37"E	38.50'
L6	N0°10'23"E	97.00'
L7	S2°50'26"E	54.25'
L8	N0°00'00"E	30.57'
L9	N14°37'01"E	54.43'
L10	N25°42'37"W	39.11'
L11	N22°04'32"W	32.34'
L12	N13°24'41"W	44.10'
L13	N14°43'36"W	57.25'
L14	N24°09'51"W	97.94'
L15	N18°44'16"W	85.71'
L16	N39°03'24"W	40.30'

KURT F. ORBAN
PROFESSIONAL LAND SURVEYOR
NEVADA LICENSE NO. 17828

PROFESSIONAL LAND SURVEYOR - STATE OF NEVADA
KURT F. ORBAN
Exp. 12/31/19
NO. 17828

0 25 50 100
(IN FEET)
1 inch = 50 ft.

WALLACE MORRIS ORBAN SURVEYING, LLC.
LAND SURVEY CONSULTING
1250 LAMOILLE HIGHWAY, UNIT 628
ELKO, NEVADA 89801
PH:775.753.3610 FX: 775-753-7078

WAC21-0002
EXHIBIT C

REV:	DATE:	DESCRIPTION:

COMMNET WIRELESS, LLC
VYA SITE, WASHOE COUNTY, NEVADA
061-010-49
TOPOGRAPHY MAP

DATE:	03/29/18
DRAFTER:	KFO
FIELD:	BH/CH
CHECKED:	KFO
JOB NO.	ECOM-18020

SHEET 1 OF 1 SHEETS

Amendment of Conditions Application Supplemental Information (All required Information may be separately attached)

1. The following information is required for an Amendment of Conditions:

a. Provide a written explanation of the proposed amendment, why you are asking for the amendment, and how the amendment will modify the approval.

Commnet of Nevada, LLC (Commnet Wireless) is seeking to extend the Board of Adjustment Action Conditions of Approval for Special Use Permit WSUP19-0003 for an additional one (1) year to obtain all required Bureau of Land Management final Right-of-Way grants and the issuance of Washoe County's Building Permit.

Over the course of the past two (2) years, the Applegate/Susanville, CA, Bureau of Land Management Field Offices has faced several obstacles including the California/Nevada forest fires, COVID-19, and short-staffing.

The additional one (1) year will be necessary to ensure adequate time frame to obtain all final grants and permits.

b. Identify the specific Condition or Conditions that you are requesting to amend.

Commnet Wireless requests to amend condition 1 (d) of the Washoe County Planning and Building Division where is states that the applicant shall submit complete construction plans and building permits shall be issued within two years from the date of approval by Washoe County. The approval date for WSUP19-0003 was issued June 6, 2019.

While Commnet Wireless has submitted construction drawings and is working with Washoe County Planning and Building Department, the Bureau of Land Management must also review and approve all final changes to the construction drawings prior to issuing the final right of way grant.

c. Provide the requested amendment language to each Condition or Conditions, and provide both the existing and proposed condition(s).

Please refer to the attached Board of Action Conditions of Approval for Special Use Permit WSUP19-0003

Existing Condition 1 (d) language

The applicant shall submit complete construction plans and building permit shall be issued with two years from the date of approval by Washoe County. The applicant shall complete construction within the time specified by the building permits. Compliance with this condition shall be determined by the Planning and Building Division.

Proposed Condition 1 (d) language

The applicant shall submit complete construction plans and building permit shall be issued within one (1) year from the date of Amendment of Conditions approval by Washoe County. The applicant shall complete construction within the time specified by the building permits. Compliance with this condition shall be determined by the Planning and Building Division.

2. Describe any potential impacts to public health, safety, or welfare that could result from granting the amendment. Describe how the amendment affects the required findings as approved.

This telecommunications facility is part of the FirstNet nationwide buildout to provide an emergency broadband network dedicated to first responders (ie Fire, Police, EMT) for the ability to communicate on a single network for any public safety needs in the area. In addition, the tower will provide expansion of LTE for Commnet and any of its collaboration partners/collocators.

The approval of this Amendment is vital in the expansion of FirstNet's coverage to provide reliable communications for public safety.

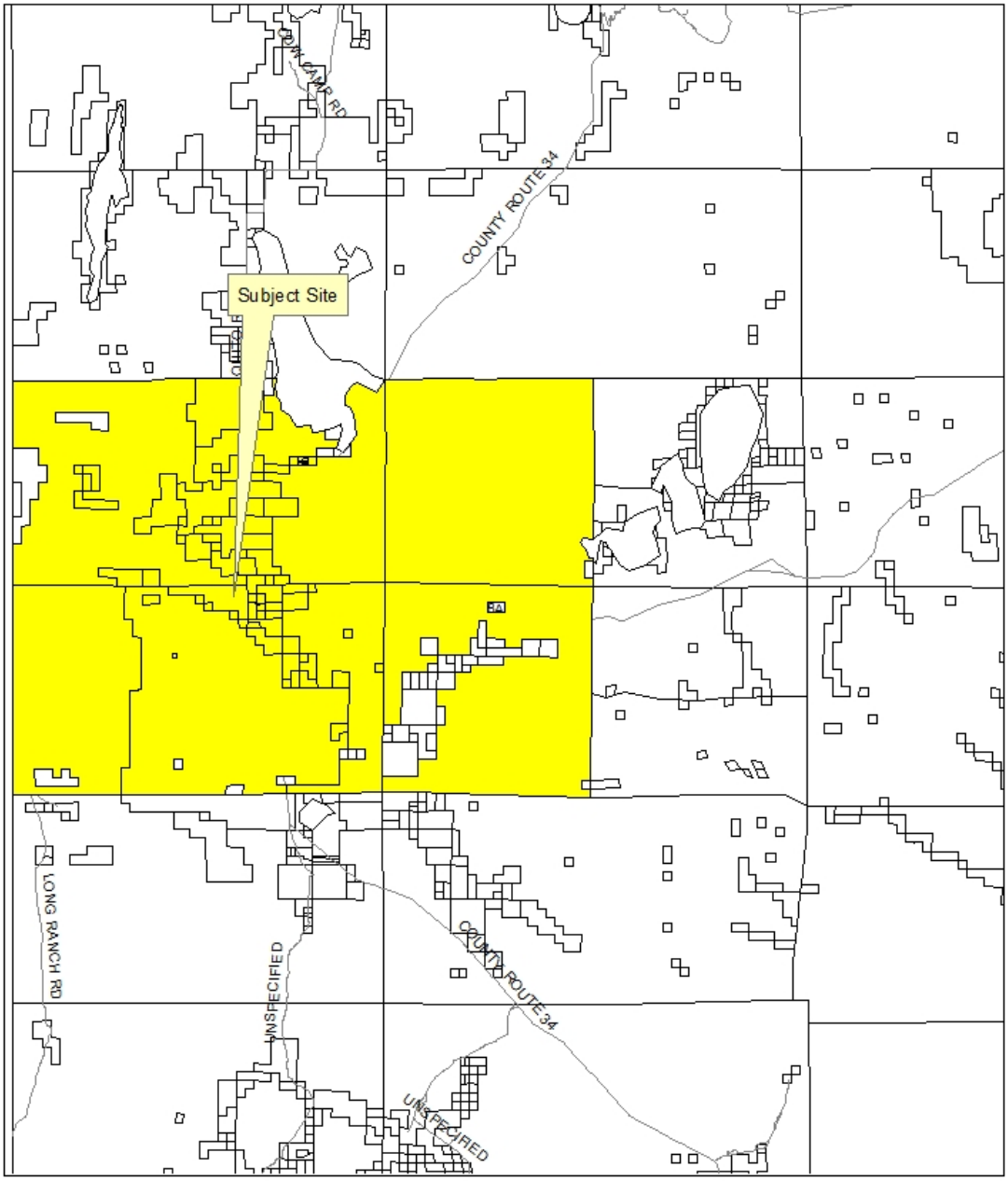

Mailing and Vicinity Map

WAC21-0002
83 parcels selected at 22000 feet

0 5,000 10,000 20,000
Feet

Community Services Department
WASHOE COUNTY
NEVADA
1001 E. Ninth St.
Reno, Nevada 89512 (775) 328-3600

Source: Planning and Building Division Date: 8/10/2021

From: Rosa, Genine
To: Pelham, Roger
Cc: Restori, Joshua
Subject: March Agency Review Comments
Date: Tuesday, March 16, 2021 4:08:53 PM

Amendment of Conditions Case Number WAC21-0002 (Extension of Time for WSUP19-0003, Vya Monopole)
No comments

Tentative Parcel Map Case Number WTPM21-0003 (RT Merchant 2nd Subsequent Parcel Map)
No comments

Genine Rosa
Environmental Engineer II | Air Quality Management Division | Washoe County Health District
grosa@washoecounty.us | O: (775) 784-7204 | C: (775) 420-9185 | 1001 E. Ninth St., Bldg. B, Reno, NV 89512

*My schedule is 4 x 10's M-Th 7-5:30 off on Fridays.

www.OurCleanAir.com

WASHOE COUNTY HEALTH DISTRICT
ENHANCING QUALITY OF LIFE
Public Health

From: Program, EMS
To: Pelham, Roger
Subject: FW: March Agency Review Memo II
Date: Tuesday, March 16, 2021 12:41:09 PM
Attachments: March Agency Review Memo II.pdf
image001.png

Good afternoon,

The EMS Oversight Program has reviewed Amendment of Conditions Case Number WAC21-0002 (Extension of Time for WSUP19-0004, Vya Monopole) and does not currently have any questions, comments or concerns regarding this amendment.

Please let me know if you have any questions.

Thank you,

Jackie Lawson

Office Support Specialist | Division of Epidemiology & Public Health Preparedness | Washoe County Health District
jlawson@washoecounty.us | O: (775) 326-6051 | F: (775) 785-4185 | 1001 E. Ninth St., Bldg B, Reno, NV 89512

WASHOE COUNTY HEALTH DISTRICT
ENHANCING QUALITY OF LIFE
Public Health

From: Way, Dale
To: Pelham, Roger
Cc: Lemon, Brittany; Lee, Brett
Subject: WAC21-0002 (Extension of Time for SHUP19-0003, Vya Monopole)
Date: Monday, March 22, 2021 12:26:15 PM

Roger,

We have no specific comments on this request beyond adopted codes and amendments. Adopted codes and amendments may have changed since the original application.

Thank you.

Dale Way
Deputy Fire Chief – Fire Prevention | Truckee Meadows Fire & Rescue
dway@tmfpd.us | Office: 775.326.6000
3663 Barron Wy, Reno, NV 89511

"Committed to excellence, service, and the protection of life and property in our community"

From: Kirschenman, Sophia
To: Pelham, Roger
Subject: Parks Comments Re: WAC21-0002
Date: Wednesday, March 17, 2021 1:30:47 PM
Attachments: Outlook-p2h4eam3.png
Outlook-d03sk2lq.png
Outlook-hnlcamyz.png
Outlook-xuvihqxr.png
Outlook-eilrbpzr.png

Hi Roger,

I have reviewed WAC21-0002 (Extension of Time for WSUP19-0003, Vya Monopole) on behalf of Washoe County Regional Parks and Open Space and have no comments or conditions.

Thank you,

Sophia Kirschenman
Park Planner | Community Services Department
775.328.3623 | 1001 E. 9th Street, Reno, NV 89512
Tell us how we did by taking a quick survey.

WASHOE COUNTY
COMMUNITY SERVICES
INTEGRITY COMMUNICATION SERVICE

P.O. Box 11130
Reno, Nevada 89520-0027
Phone: (775) 328-3600
Fax: (775) 328-3699

March 18, 2021

TO: Roger Pelham, Senior Planner, CSD, Planning & Development Division

FROM: Vahid Behmaram, Water Management Planner Coordinator, CSD

SUBJECT: Amendment of Conditions Case Number WAC21-0002 (Extension of Time for WSUP19-0003, Vya Monopole)

Project description:

The applicant is proposing to approve an Amendment of Conditions to extend the approval of Special Use Permit Case Number WSUP19-0003 for one additional year, until June 6, 2022. The original approval was for a new wireless cellular facility consisting of a 150-foot-high monopole structure, equipment shelter, outdoor generator and LP tank.

The Community Services Department (CSD) recommends approval of this project with the following Water Rights conditions:

There are no conditions of approval.